CITY OF
Highland Village

# DRAINAGE
# CRITERIA MANUAL

**May 2014**

# Table of Contents

**SECTION 1: GENERAL**

1.1 GENERAL ..... 1-1
1.2 REQUIRED TECHNICAL INFORMATION TO BE COLLECTED AND SUBMITTED FOR CITY REVIEW ..... 1-1
1.3 REQUIREMENTS FOR STORM WATER RUNOFF ..... 1-2
1.4 BEST MANAGEMENT PRACTICES ..... 1-2
1.5 STORM RUNOFF STORAGE ..... 1-3
1.6 CRITERIA FOR FILLING IN A FLOODPLAN ..... 1-3
1.7 HYDRAULIC CRITERIA FOR BRIDGE DESIGN ..... 1-4
1.8 INTEGRATED SITE DESIGN ..... 1-5
1.8.1 List of Integrated Site Design Practices and Techniques ..... 1-6

**SECTION 2: DETERMINATION OF STORM RUNOFF**

2.1 GENERAL ..... 2-1
2.2 EFFECTS OF URBANIZATION ..... 2-2
2.3 RAINFALL-RUNOFF DESIGN FREQUENCY ..... 2-3
2.4 RELATING RAINFALL TO RUNOFF ..... 2-3
2.4.1 Design Storm Rainfall ..... 2-3
2.4.2 Design Storm Losses ..... 2-5
2.5 UNIT HYDROGRAPH ..... 2-6
2.5.1 Snyders Unit Hydrograph ..... 2-6
2.5.2 Routing the Flood Hydrograph ..... 2-8
2.6 RATIONAL METHOD ..... 2-9
2.6.1 General ..... 2-9
2.6.2 Definition of Rational Formula ..... 2-9
2.6.3 Assumptions of Rational Method ..... 2-10
2.6.4 Runoff Coefficient (C) ..... 2-10
2.6.5 Rainfall Intensity ..... 2-13
2.6.6 Drainage Area (A) ..... 2-14

**SECTION 3: FLOW IN STREETS**


3.1 GENERAL ..... 3-1

3.1.1 Interference Due to Flow in Streets ..... 3-1

3.1.2 Interference Due to Ponding ..... 3-1

3.1.3 Interference Due to Water Flowing Across Traffic Lanes ..... 3-2

3.1.4 Effects on Pedestrians ..... 3-2

3.2 PERMISSIBLE SPREAD OF WATER ..... 3-2

3.2.1 Primary Arterial Streets (With a Median) ..... 3-2

3.2.2 Minor Arterial Streets (Without a Median) ..... 3-2

3.2.3 Collector Streets ..... 3-3

3.2.4 Residential Streets ..... 3-3

3.2.5 Rural Streets ..... 3-3

3.2.6 Alley Ways ..... 3-3

3.2.7 Parking Lots ..... 3-4

3.3 MINIMUM AND MAXIMUM VELOCITES ..... 3-4

3.3.1 Longitudinal Slope ..... 3-4

3.3.2 Cross (Transverse) Slope ..... 3-6

3.4 DESIGN METHOD ..... 3-7

3.4.1 Straight Crowns ..... 3-7

3.4.2 Parabolic Crowns ..... 3-8

3.4.3 Alleys ..... 3-9


**SECTION 4: STORM DRAIN INLETS**


4.1 GENERAL ..... 4-1

4.2 CLASSIFICATION ..... 4-2

4.2.1 Inlet Classes ..... 4-2

4.2.1 Inlet Locations ..... 4-5

4.3 INLETS AT LOW POINT ..... 4-5

4.3.1 Curb Opening Inlets and Drop Inlets at Low Point ..... 4-6

4.3.2 Grate Inlets at Low Point ..... 4-6

4.3.3 Combination Inlets at Low Point ..... 4-7

4.3.4 Slotted Drain Inlets at Low Point ..... 4-8
4.4 INLETS ON GRADE ..... 4-8
4.4.1 Curb Opening Inlets on Grade ..... 4-8
4.4.2 Grate Inlets on Grade ..... 4-8
4.4.3 Combination Inlets on Grade ..... 4-9

**SECTION 5: FLOW IN STORM DRAINS AND THEIR APPURTENANCES**

5.1 GENERAL ..... 5-1
5.2 VELOCITIES AND GRADES ..... 5-1
5.2.1 Minimum Grades ..... 5-1
5.2.2 Maximum Velocities ..... 5-2
5.2.3 Minimum Diameter ..... 5-2
5.3 MATERIALS ..... 5-2
5.4 FULL OR PART FULL FLOW IN STORM DRAINS ..... 5-4
5.4.1 General ..... 5-4
5.4.2 Pipe Flow Charts ..... 5-5
5.5 HYDRAULIC GRADIENT AND PROFILE OF STORM DRAINS ..... 5-6
5.6 MANHOLE LOCATION ..... 5-7
5.7 PIPE CONNECTIONS ..... 5-8
5.8 MINOR HEAD LOSSES AT STRUCTURES ..... 5-8
5.9 UTILITIES ..... 5-9

**SECTION 6: DESIGN OF ENCLOSED STORM DRAINAGE SYSTEMS**

6.1 GENERAL ..... 6-1
6.2 PRELIMINARY DESIGN CONSIDERATIONS ..... 6-2
6.3 INLET SYSTEM ..... 6-3
6.4 STORM SEWER SYSTEM ..... 6-4
6.4.1 Storm Sewer Pipe ..... 6-4
6.4.2 Pipe Size Changes, Junctions, Inlets and Manholes ..... 6-4
6.4.3 Outlet Erosion Control ..... 6-5

**SECTION 7: FLOW IN OPEN CHANNELS**


7.1 GENERAL ..... 7-1
7.2 CHANNEL DISCHARGE ..... 7-2
7.2.1 Manning's Equation ..... 7-2
7.2.2 Uniform Flow ..... 7-2
7.2.3 Normal Depth ..... 7-3
7.3 WATER SURFACE PROFILES ..... 7-3
7.4 DESIGN CONSIDERATIONS ..... 7-3
7.5 CHANNEL CROSS-SECTIONS ..... 7-5
7.5.1 Side Slope ..... 7-5
7.5.2 Depth ..... 7-5
7.5.3 Bottom Width ..... 7-5
7.5.4 Velocities ..... 7-5
7.5.5 Pilot Channels ..... 7-6
7.5.6 Freeboard ..... 7-6
7.6 STRUCTURES ..... 7-6
7.7 RIGHT-OF-WAY REQUIRED FOR OPEN CHANNELS ..... 7-7
7.8 STREETS ALONG DRAINAGE WAYS ..... 7-7


**SECTION 8: DESIGN OF CULVERTS**


8.1 GENERAL ..... 8-1
8.2 QUANTITY OF FLOW ..... 8-1
8.3 HEADWALLS AND ENDWALLS ..... 8-1
8.3.1 Conditions at Entrance ..... 8-2
8.3.2 Type of Headwall or Endwall ..... 8-4
8.3.3 Special Headwall and Endwall Designs ..... 8-5
8.4 SPECIAL CULVERT DESIGNS ..... 8-5
8.5 CULVERT DESIGN CRITERIA ..... 8-5
8.5.1 General ..... 8-5
8.5.2 Bends ..... 8-6
8.6 CULVERT FLOW CONTROLS ..... 8-7

8.7 SELECTION OF CULVERT SIZE AND TYPE ..... 8-7
8.7.1 Culvert Operating Conditions ..... 8-7
8.7.2 Type I ..... 8-9
8.7.3 Type II ..... 8-11
8.7.4 Type IIIA ..... 8-13
8.7.5 Type IIIB ..... 8-14
8.7.6 Type IVA ..... 8-15
8.7.7 Type IVB ..... 8-17

**SECTION 9: OUTLET STRUCTURES**

9.1 GENERAL ..... 9-1
9.2 TYPES OF OUTLETS ..... 9-1
9.3 PIPES AND CULVERTS ..... 9-1
9.4 ORIFICES ..... 9-2
9.5 WEIRS ..... 9-2
9.5.1 Typical Sharp Crested Weirs ..... 9-2
9.5.2 Submerged Sharp Crested Weirs ..... 9-3
9.5.3 Broad Crested Weirs ..... 9-3
9.5.4 V-Notch Weirs ..... 9-4
9.6 EMERGENCY SPILLWAYS ..... 9-4
9.7 MULTI-STAGE OUTLETS ..... 9-5

**SECTION 10: STORM RUNOFF STORAGE**

10.1 GENERAL ..... 10-1
10.2 STORAGE CLASSIFICATION ..... 10-1
10.2.1 Retention Storage ..... 10-1
10.2.2 Detention Storage ..... 10-2
10.2.3 Multi-Stage Detention Storage ..... 10-3
10.2.4 On-line Storage and Off-Line Storage ..... 10-4
10.3 DESIGN PROCEDURES ..... 10-4

10.3.1 Hydrologic Design ..... 10-5
10.3.2 Hydraulic Design ..... 10-5
10.4 GENERAL REQUIREMENTS FOR DETENTION POND CONSTRUCTION ..... 10-7
10.4.1 Pilot Channels ..... 10-8
10.4.2 Outlet Structure ..... 10-8
10.5 GEOTECHNICAL INVESTIGATION ..... 10-9
10.6 REQUIRED ANALYSES ..... 10-9

**SECTION 11: CONSTRUCTION PLAN PREPARATION**

11.1 GENERAL ..... 11-1
11.2 PRELIMINARY PLANS ..... 11-1
11.3 FINAL PLANS ..... 11-1

**APPENDICES**

APPENDIX A: GLOSSARY OF TERMS ..... A-1
APPENDIX B: CHECK LIST FOR STORM DRAINAGE PLANS ..... B-1
APPENDIX C: BEST MANAGEMENT PRACTICE DETAILS ..... C-1

# List of Tables


| Table No. | Table | Page |
|---|---|---|
| 2-1 | Constraints on Using Recommended Hydrologic Methods | 2-2 |
| 2-2 | Point Rainfall Amount for Varying Durations and Frequencies in Highland Village, Texas | 2-5 |
| 2-3 | Uniform Loss Rate Recommended Values for Highland Village | 2-6 |
| 2-4 | Runoff Coeffecients for Rational Formula | 2-12 |
| 2-5 | Minimum Inlet Time of Concentration | 2-14 |
| 3-1 | Intercept Coefficients | 3-5 |
| 3-2 | Normal Pavement Cross Slopes | 3-6 |
| 3-3 | Manning's "n" for Street and Pavement Gutters | 3-8 |
| 4-1 | Storm Drain Inlets | 4-3 |
| 4-1 | Storm Drain Inlets (cont.) | 4-4 |
| 5-1 | Maximum Desirable Velocity in Storm Drains | 5-2 |
| 5-2 | Roughness Coefficients "n" for Storm Drains | 5-3 |
| 5-3 | Access Manhole Spacing | 5-7 |
| 5-4 | Junction or Structure Coefficient of Loss | 5-9 |
| 7-1 | Roughness Coefficients (Manning's "n") and Allowable Velocities for Natural Channels | 7-4 |
| 8-1 | Values of Entrance Loss Coefficients "K" | 8-3 |
| 8-2 | Reduction Factors for Velocity of Appoach | 8-4 |
| 8-3 | Loss Coefficients for Bends | 8-8 |
| 8-4 | Culvert Discharge – Velocity Limitations | 8-8 |
| 9-1 | Broad-Crested Weir Coefficient C | 9-5 |

# List of Figures


| Figure No. | Figure |
|---|---|
| 2-1 | Rainfall Curves for Highland Village, Texas |
| 2-2 | Time of Concentration for Surface Flow |
| 3-1 | Capacity of Triangular Gutters |
| 3-2 | Capacity of Parabolic Gutters 26’ and 36’ Street Widths |
| 3-3 | Capacity of Parabolic Gutters 44’ and 48’ Street Widths |
| 3-4 | Capacity of Alley Section |
| 4-1 | Classes of Storm Drains |
| 4-2 | Recessed and Standard Curb Opening Inlet Capacity Curves at Low Point |
| 4-3 | Grate Inlet Capacity Curves at Low Point |
| 4-4 | Combination Inlet Capacity Curves at Low Point |
| 4-5 | Recessed and Standard Curb Opening Inlet Capacity Curves on Grade for ¼ inch cross slope |
| 4-6 | Recessed and Standard Curb Opeinng Inlet Capacity Curves on Grade for 6” parabolic |
| 4-7 | Recessed and Standard Curb Opeinng Inlet Capacity Curves on Grade for ½ inch cross slope annd 6” Parabolic |
| 4-8 | Recessed and Standard Curb Opeinng Inlet Capacity Curves on Grade for 4” parabolic |
| 4-9 | Recessed and Standard Curb Opeinng Inlet Capacity Curves on Grade for Alley Ways |
| 4-10 | Two Grate Combination Inlet Capacity Curves on Grade |
| 4-11 | Three Grate Inlet and Three Grate Combination Inlet Capacity Curves on Grade |
| 4-12 | Four Grate Combination Inlet Capacity Curves on Grade |
| 4-13 | Two Grate Inlet Capacity Curves on Grade |
| 4-14 | Four Grate Inlet Capacity Curves on Grade |

**Figure No.** **Figure**

4-15 Six Grate Inlet Capacity Curves on Grade
4-16 Discharge Rates for Slotted Drain Inlets

5-1 Capacity of Circular Pipes Flowing Full
5-2 Solution of Manning's Equation for Flow in Storm Drains
5-3 Minor Head Losses due to Turbulence at Structures
5-4 Minor Head Losses due to Turbulence at Structures Continued

7-1 Solution of Manning's Equation for Channels of Various Side Slopes
7-2 Typical Channel Geometry's

9-1 Orifices
9-2 Perforated Riser
9-3 Sharp-Crested Weirs
9-4 V-Notch Weirs
9-5 Emergency Spillways

10-1 Preliminary Pond Sizing
10-2 Multi-Stage Pond System
10-3 Typical Wet Pond
10-4 Typical Infiltration Basin

## 1.0 GENERAL DRAINAGE POLICY

### 1.1 GENERAL

The acceptance of the design, size, type and location of each drainage area and subdrainage area must be determined for each storm drainage facility. All storm drainage facilities in the City of Highland Village are subject to the approval of the Public Works Director/City Engineer.

The criteria and specifications presented in this manual are to be considered as minimum requirements.

In the case of drainage improvements required for private development projects, the developer and his engineer shall bear total responsibility for the adequacy of the design. The approval of a given drainage facility by the City of Highland Village in no way relieves the developer and his engineer from their responsibility.

### 1.2 REQUIRED TECHNICAL INFORMATION TO BE COLLECTED AND SUBMITTED FOR CITY REVIEW

In conjunction with the preliminary plat, the design engineer shall submit a drainage plan which includes the following minimum information:

- Contours for on site and contributing off site drainage areas (2-foot maximum contour interval required for onsite areas):
- Drainage patterns and basins
- Drainage subareas indicating on site, street and lot drainage patterns
- Property lines, adjacent areas and easements
- Boundaries of wooded areas and tree clusters
- Existing stormwater facilities on-site and off-site facilities that will receive discharge from proposed development
- All proposed storm sewer systems
- Sufficient flow arrows to indicate the general direction of surface runoff including all crests, sags and water inlets
- Runoff calculations for all areas and subareas in accordance with the requirements of Section 2.0
- Storm runoff storage calculations where necessary in accordance with the requirements of Section 10.0

- The design engineer may be required to submit a geotechnical report prepared by a licensed professional engineer to identify groundwater elevations within the proposed development. Site improvements should be designed to prevent future groundwater problems.

Approval of the drainage plan by the Public Works Director/City Engineer shall be required prior to approval of the preliminary plat.

In conjunction with the final plat, the design engineer shall submit appropriate hydraulic and hydrologic design calculations and other technical information for all proposed storm drainage facilities to demonstrate that the minimum standards provided in this manual have been met. Construction plans for storm drainage facilities shall be prepared in general conformance with Section 11.0 and the Check List provided in Appendix B.
The design engineer may be required to submit additional technical information beyond that which is required in this manual if it is considered necessary by the Public Works Director/City Engineer to complete the design review.

## 1.3 REQUIREMENTS FOR STORM WATER RUNOFF

There shall be no diversion of runoff from one drainage basin to another.
No discharge of runoff into existing storm drainage facilities, whether natural or manmade, shall be allowed unless the existing drainage facilities have adequate capacity to carry the flow and no detrimental erosion or sediment deposit will result. It shall be the responsibility of the design engineer to provide sufficient design calculations to verify the capacity of the existing drainage facilities.

No increase in the rate or concentration of runoff over pre-development conditions shall be allowed onto private or public property without written acceptance of said increase by the affected property owners.

Wherever practical, the design engineer shall establish street grades within a subdivision so as to prevent runoff from one residential lot to another.

Where the natural topography dictates that lot to lot drainage is necessary, the following general rules shall apply:

1. Sheet flow of runoff across rear or side lot lines shall not be allowed.
2. Runoff directed to a common rear lot line shall be collected in a drainage swale or valley with adequate capacity to carry away the storm runoff calculated in accordance with Section 2.0
3. Collection of runoff in a rear yard swale from more than three residential lots shall be avoided.
4. Rear yard swales shall be designed to function effectively after fences and other lot improvements have been installed.
5. Drainage swales designed to carry runoff from two or more lots shall be located in drainage easements.

## 1.4 BEST MANAGEMENT PARACTICES

In order to address the requirements of pollution reduction at construction sites, a variety of controls should be used. Several North Central Texas Council of Governments standard details are included in the Appendix C. These controls should be used to reduce soil erosion, reduce sediment loss from the site and manage construction generated waste. Erosion and sediment controls shall be selected based on drainage patterns and the layout of the site. Erosion controls reduce the amount of soil removed and transported by stormwater runoff. Inlet protection is used to reduce sediment in storm sewer systems. More information about erosion and sediment controls can be found in the North Central Texas Council of Governments publication iSWM Technical Manual; Construction Controls (most current version available).

## 1.5 STORM RUNOFF STORAGE

Developer shall provide sufficient storage systems to ensure the post development downstream peak flow does not to exceed the predevelopment flow. The design of storm runoff storage facilities shall meet the requirements of Section 10.0 and have sufficiently design outfalls as required in Section 9.0.

## 1.6 CRITERIA FOR FILLING IN A FLOODPLAIN

The criteria established for filling in a floodplain as described in this section shall apply to any construction within a Special Flood Hazard Area.

A Special Flood Hazard Area (SFHA) is defined as the land area covered by the floodwaters of the base flood on NFIP maps. The SFHA is the area where the National Flood Insurance Program's (NFIP's) floodplain management regulations must be enforced and the area where the mandatory purchase of flood insurance applies.

On watercourses not covered by the FIRM, the Special Flood Hazard Area including areas of flood hazard that is determined to be outside the Special Flood Hazard Area between the limits of the base flood and the 0.2-percent-annual-chance (or 500-year) flood, shall be determined by an appropriate floodplain analysis. The results of such an analysis must be reviewed and accepted by the Public Works Director/City Engineer.

The following specifications shall be observed:

1. There shall be no increase in the water surface elevation on any property upstream, downstream or on the opposite bank from the proposed site caused by construction activity in the floodplain. The property owner/developer shall be required to provide technically acceptable proof (such as a backwater analysis) that this restriction has not been violated.
2. Any increase in mean stream flow velocity shall be limited so as not to exceed the open channel velocity limitations delineated in Section 7.0 of this manual. In addition, there shall be no increase in erosional activity on any property upstream, downstream or on the opposite bank from the proposed site caused by construction activity in the floodplain. The owner/developer shall be required to provide technically acceptable proof (such as a backwater analysis) that this restriction has not been violated.
3. The toe of any fill slope must parallel the natural channel to prevent an unbalanced stream flow in the improved channel.
4. To ensure maximum accessibility to the improved channel area for maintenance and other purposes, and to lessen the probability of slope erosion during periods of high water, maximum slopes of the filled area shall not exceed four (Horizontal) to one (vertical) without approval of the Public Works Director/City Engineer. The slope of any excavated area in the channel which is not in rock may not exceed four to one without approval of the Public Works Director/City Engineer. Vertical walls, terracing and other slope treatments may be considered provided no unbalancing of stream flow results, and only as a part of a landscaping plan submission.

5. Fill must be placed to at least 1 foot above the 100 year flood line based on fully-developed discharges. The lowest floor of any structure must be constructed at least 2 feet above the 100 year flood line based on fully-developed discharges.

## 1.7 HYDRAULIC CRITERIA FOR BRIDGE DESIGN

Wherever possible, the proposed bridge should be designed to span a channel section equal to the approaching channel section. Wherever possible, bridges should be constructed to cross channels at a 90° angle, which normally will result in the most economical construction. Wherever the bridge structure is skewed, the bents should be constructed parallel to the flow of water.

Velocities through the bridge opening shall not exceed 6 feet per second (fps) for earthen channels unless certified geotechnical data is provided which confirms that the channel banks will withstand higher velocities. Appropriate slope protection shall be provided for the channel slopes and the bottom when velocities are higher than 6 fps or the erosive velocity as determined by geotechnical data.

A distance of 1 foot between the maximum 100 year design water surface, based on a fully-developed discharge, and the lowest point of the bridge stringers should be maintained.

For a detailed discussion of the hydraulics of bridge design, the engineer is referred to the U.S. Department of Transportation/Federal Highway Administration publication. HDS-7 Hydraulic Design of Safe Bridges, revised April, 2012.

## 1.8 INTEGRATED SITE DESIGN

Integrated site design is the consideration of various design methods to reduce the impact on watersheds. This includes conserving natural areas, reducing impervious cover, and better integration of stormwater treatment. Implementing these nonstructural approaches collectively can control the movement and reduce the amount of runoff.

The use of stormwater integrated site design also has a number of other ancillary benefits including:

- Reduced construction costs
- Increased property values
- More open space for recreation
- More pedestrian friendly neighborhoods
- Protection of sensitive forests, wetlands, and habitats
- More aesthetically pleasing and naturally attractive landscape
- Easier compliance with wetland and other resource protection regulations

Integrated site design should be considered to reduce the amount of required structures.

### 1.8.1 List of Integrated Site Design Practices and Techniques

Integrated site design can be categorized into 4 categories; Conservation, Lower Impact, Reduce Cover, and Utilization.

- **Conservation of Natural Features and Resources**
  - Preserve Undisturbed Natural Areas
  - Preserve Riparian Buffers
  - Avoid Floodplains
  - Avoid Steep Slopes
  - Minimize Siting on Porous or Erodible Soils

- **Lower Impact Site Design Techniques**
  - Fit Design to the Terrain
  - Locate Development in Less Sensitive Areas
  - Reduce Limits of Clearing and Grading
  - Utilize Open Space Development
  - Consider Creative Designs

- **Reduction of Impervious Cover**
  - Reduce Roadway Lengths and Widths
  - Reduce Building Footprints
  - Reduce the Parking Footprint
  - Reduce Setbacks and Frontages
  - Use Fewer or Alternative Cul-de-Sacs
  - Create Parking Lot Stormwater "Islands"

- **Utilization of Natural Features for Stormwater Management**
  - Use Buffers and Undisturbed Areas
  - Use Natural Drainage ways Instead of Storm Sewers
  - Use Vegetated Swale Instead of Curb and Gutter
  - Drain Rooftop Runoff to Pervious Areas

For a detailed discussion of the integrated site design, the engineer is referred to the North Central Texas Council of Governments publication iSWM Technical Manual, (most current version available).

## 2.0 DETERMINATION OF STORM RUNOFF

### 2.1 GENERAL

Long-term records of rainfall and the resulting runoff in an area provide the best data source on which to base the design of storm drainage and flood control systems for that area. However, it is not possible to obtain these records in sufficient quantities in most watersheds. Therefore, numerous procedures have been developed to attempt to effectively relate a given amount of rainfall in a given physiographic area to a given pattern of runoff. This section provides the acceptable procedures for the determination of flood hydrographs in the City of Highland Village. Additional information on how to use the following methods can be found in HDS-2, Hydraulic Design Series 2.

For drainage areas larger than 400 acres, the determination of flood hydrographs in the City of Highland Village shall be accomplished through the use of the computer program, HEC-HMS. This program employs acceptable hydrologic methodologies discussed in this section. The use of alternative means of flood hydrograph determination is acceptable subject to the approval of the Public Works Director/City Engineer and provided full documentation of the alternative methodology is presented for review.

For drainage areas less than 400 acres, it is acceptable to utilize the Rational, Modified Rational or a Unit Hydrograph Method, in conjunction with the Table 2-1 below, to determine peak flow.

| **TABLE 2-1**<br>CONSTRAINTS ON USING RECOMMENDED HYDROLOGIC METHODS | | |
|---|---|---|
| Method | Size Limitations[1] | Comments |
| Rational | 0 - 100 acres | Method can be used for estimating peak flows and the design of small site or subdivision storm sewer systems. |
| Modified Rational[2] | 0 - 200 acres | Method can be used for estimating runoff volumes for storage design. |
| Unit Hydrograph (SCS)[3] | Any Size | Method can be used for estimating peak flows and hydrographs for all design applications. |
| Unit Hydrograph (Snyder's)[4] | 1 acre and larger | Method can be used for estimating peak flows and hydrographs for all design applications. |

[1] Size limitation refers to the drainage basin for the stormwater management facility (e.g., culvert, inlet).

[2] Where the Modified Rational Method is used for conceptualizing, the engineer is cautioned that the method could underestimate the storage volume.

[3] This refers to SCS routing methodology included in many readily available programs (such as HEC-HMS or HEC-1) that utilize this methodology.

[4] This refers to the Snyder's methodology included in many readily available programs (such as HEC-HMS or HEC-1) that utilize this methodology.

Source: HEC-22

## 2.2 EFFECTS OF URBANIZATION

It is generally accepted that urban development has a pronounced effect on the rate and volume of runoff from a given rainfall. Urbanization generally alters the hydrology of a watershed by improving its hydraulic efficiency, reducing its surface infiltration and reducing its storage capacity. The reduction of a watershed's storage capacity and surface infiltration results from the replacement of porous surfaces and ponding areas with buildings, streets, parking lots, sidewalks and other facilities characteristic of urban development.

Zoning maps, future land use maps and watershed master plans should be used as aids in establishing the anticipated surface character following development. The selection of design runoff coefficients and/or percent impervious cover factors must be based upon the appropriate degree of future urbanization.

## 2.3 RAINFALL-RUNOFF DESIGN FREQUENCY

All new storm drainage facilities in the City of Highland Village including storm drains, culverts and open channels shall be designed to properly accommodate the runoff from a storm event of 5 year, 10 year, 25 year, 50 year and 100 year frequency.

Approval of the Director of Public Works/City Engineer shall be required whenever the design engineer proposes the use of a storm event other than those listed above.

## 2.4 RELATING RAINFALL TO RUNOFF

The process of relating rainfall on a watershed to runoff at a given point in the watershed is generally accomplished in the following four discrete stages:

1. Determination of the Design Rainfall
2. Calculation of Abstractions (Losses)
3. Generation of the runoff hydrograph for the Subarea
4. Determination of the change in the shape of the hydrograph (termed routing) as the Flood Wave moves through the Watershed

Each of these four stages will be discussed in the following sections (Sections 2.4.1 through 2.4.4).

### 2.4.1 Design Storm Rainfall

1. Parameters of a Storm Event—A design storm rainfall event is described in terms of four parameters: frequency, total storm duration, distribution of intensity with time, and areal extent.

    a. Frequency—Storm frequency is the measure of the expected recurrence interval of a storm of a given magnitude. As an example, the 100-year frequency storm event (with a 100-year frequency magnitude) can be expected to occur on average once every 100 years. In other words, the 100-year storm event has a 1% chance of occurring in any given year.

b. Total Storm Duration—Total storm duration is defined as the time elapsed between the start and the finish of a rainfall associated with a storm event. The engineer's choice for design storm duration is generally dependent on the size of the pertinent watershed. For design purposes, a storm of 24-hour duration can be expected to adequately reflect most time-related effects on the runoff hydrograph. The storm duration will vary for designation of the probable maximum flood (PMF) precipitation as required by special designs such as dam breach analyses.

c. Distribution of Intensity with Time—For design purposes in the City of Highland Village, the synthetic rainfall hyetograph peak shall occur at the two-thirds point of the total storm duration. The computer program HEC-HMS has routines for generating acceptable design rainfall hyetographs.

d. Areal Extent— The intensity/duration/frequency relationships used to build rainfall hyetographs are based on rainfall amounts measured at a single location. Logically, the larger the watershed being studied, the less rainfall volume per unit area can be expected to fall uniformly over the watershed for a given frequency event.

   Figure 1.5 in the National Weather Service's (NES) Technical Paper No. 40 presents a means of reducing rainfall totals for a given frequency event as drainage area size increases.

   In addition, HEC-HMS has the capability to modify runoff hydrographs to account for progressively smaller design storm volumes as a real coverage increases.

2. Intensity/Duration/Frequency Curves—NWS Technical Paper No. 40 (TP-40), "Rainfall Frequency Atlas of the United States," May 1961, provides accumulated point rainfall amounts for storm durations from 30 minutes to 24 hours and event frequencies from 1 to 100 years. National Oceanic Atmospheric Administration (NOAA) publication NOAA Hydro-35, "Five to 60 Minute Precipitation Frequency for the Eastern and Central United States," June 1977, provides accumulated point rainfall amounts for durations of 5 minutes, 15 minutes and 1 hour, for 1-100 year frequency events. NWS Technical Paper No. 49 (TP-49), "Two- to Ten-Day Precipitation for Return Periods of 2 to 100 years in the Contiguous United States", 1964, extends the duration range to 10 days.

   TP-40 and Hydro-35 were used to generate Table 2-2, which presents point rainfall amounts for varying durations and frequencies in the Highland village, Texas area.

Table 2-2 may be used for determining the rainfall volumes for various durations and frequencies to input into HEC-HMS. With this data, each program will generate an acceptable design rainfall hyetograph.

**TABLE 2-2**
POINT RAINFALL AMOUNT FOR VARYING DURATIONS AND FREQUENCIES IN HIGHLAND VILLAGE, TEXAS

| Duration | 1-yr | 2-yr | 5-yr | 10-yr | 25-yr | 50-Yr | 100-Yr | 500Yr | SPF |
|---|---|---|---|---|---|---|---|---|---|
| 5-minute | | 0.490 | 0.572 | 0.634 | 0.726 | 0.798 | 0.870 | | |
| 10-minute | | 0.809 | 0.948 | 1.06 | 1.21 | 1.34 | 1.46 | | |
| 15 -minute | | 1.03 | 1.21 | 1.35 | 1.55 | 1.71 | 1.87 | | |
| 30 -minute | 1.18 | 1.43 | 1.75 | 1.99 | 2.32 | 2.59 | 2.85 | 4.10 | |
| 1-hour | 1.53 | 1.84 | 2.31 | 2.65 | 3.13 | 3.51 | 3.88 | 5.18 | |
| 2-hour | 1.77 | 2.21 | 2.96 | 3.49 | 4.13 | 4.63 | 5.15 | 6.30 | |
| 3 hour | 1.95 | 2.45 | 3.23 | 3.82 | 4.50 | 5.09 | 5.65 | 7.10 | |
| 6-hour | 2.36 | 2.89 | 3.87 | 4.60 | 5.41 | 6.06 | 6.80 | 8.50 | |
| 12-hour | 2.78 | 3.40 | 4.60 | 5.45 | 6.29 | 7.23 | 8.2 | 10.48 | |
| 24-hour | 3.17 | 3.95 | 5.32 | 6.26 | 7.42 | 8.42 | 9.42 | 12.05 | |
| 48-hour | | 4.50 | 5.95 | 7.05 | 8.50 | 9.50 | 10.80 | | |
| 72-hour | | | | | | | | | 14.70 |
| 96-hour | | 5.25 | 6.95 | 8.10 | 9.70 | 11.00 | 12.30 | | |

Sources: National Weather Service (NWS). 1961 NWS Technical Paper No. 40, "Rainfall Frequency Atlas of the United States."

National Weather Services (NWS). 1964 NWS Technical Paper No. 49, "Two- to Ten-Day Precipitation for Return Periods of 2 to 100 Years in the Contiguous United States."

National Oceanic and Atmospheric Administration. 1977. NOAA Hydro-35, "Five to 60 Minute Precipitation Frequency for the Eastern and Central United States."

Note: This table to be used with HEC-HMS methods.

### 2.4.2 Design Storm Losses

Only a portion of the rainfall volume which falls on a watershed during a storm event actually ends up as stream runoff, the remainder is intercepted by infiltration, depression storage, evaporation and other mechanisms. The volume of rainfall which becomes runoff is termed the “excess” rainfall. The difference between the observed total rainfall hyetograph and the excess rainfall hyetograph is termed an abstractions or losses.

Numerous methodologies are available to calculate abstractions. For the City of Highland Village, the following loss routines can be used:

- Uniform Loss Rate
- HEC Exponential Loss Rate
- Soil conservation Service (SCS) Curve Number Loss Rate
- Holton Loss Rate

The use of these rates is acceptable in the City of Highland Village. The loss rates in Table 2-3 should also be used as a guideline for application of the uniform loss methodology in HEC-HMS.

**Table 2-3**
UNIFORM LOSS RATE RECOMMENDED VALUES
FOR HIGHLAND VILLAGE, TEXAS

| | SAND | | CLAY | |
|---|---|---|---|---|
| Event Frequency | Initial Loss (inch) | Avg. Hourly Loss (inch) | Initial Loss (inch) | Avg. Hourly Loss (inch) |
| 1-Year | 2.1 | 0.26 | 1.50 | 0.20 |
| 2-Year | 2.1 | 0.26 | 1.50 | 0.20 |
| 5-Year | 1.8 | 0.21 | 1.30 | 0.16 |
| 10-Year | 1.5 | 0.18 | 1.12 | 0.14 |
| 25-Year | 1.3 | 0.15 | 0.95 | 0.12 |
| 50-Year | 1.1 | 0.13 | 0.84 | 0.10 |
| 100-Year | 0.9 | 0.10 | 0.75 | 0.07 |
| 500-Year | 0.6 | 0.08 | 0.50 | 0.05 |
| SPF | 0.6 | 0.08 | 0.50 | 0.05 |

Sources: NUDALLAS
US Army Corps of Engineers, Fort Worth District

## 2.5 UNIT HYDROGRAPH

### 2.5.1 Snyder's Unit Hydrograph

Given the design storm excess rainfall, it is necessary to determine the storm runoff hydrograph for the subarea of interest. In the City of Highland Village, flood hydrographs will be determined utilizing the Snyder's unit hydrograph methodology.

1. Snyder's Unit Hydrograph—In a study of watersheds of widely varying size, Snyder found consistent relationships for unit hydrographs in watersheds in which the time to peak ($t_p$) is 5.5 times longer than the duration of the unit hydrograph excess rainfall ($t_r$). For a "standard" unit hydrograph in which $t_p = 5.5\ t_r$. the following relationships were found to hold:

$$t_p = C_t (L\ L_{ca})^{0.3}$$

$$q_p = \frac{640\ C_p}{t_p}$$

| | | | |
|---|---|---|---|
| where: | $t_r$ | = | duration of the unit hydrograph excess rainfall (hrs) |
| | $t_p$ | = | time from center of unit hydrograph excess rainfall duration to peak of unit hydrograph (hrs) |
| | L | = | length of main stream (miles) |
| | $L_{ca}$ | = | distance from the point of interest/subarea outlet to the point on the stream nearest the centroid of the watershed area (miles) |
| | $C_t$ | = | timing coefficient representing variation of subarea slope and storage |
| | $q_p$ | = | peak flow rate per unit of drainage area |
| | $C_p$ | = | peaking coefficient dependent upon units and drainage basin characteristics such as flood wave and storage |

When the "standard" relationship $t_p = 5.5t_r$ does not hold, the time to peak ($t_p$) and the peak discharge per unit area ($q_p$) can be adjusted for the desired unit hydrograph computation interval $t_r$ (required) as follows:

$$t_p(adjusted) = t_r\ [required] - \frac{t_p}{5.5}$$

$$q_p(adjusted) = \frac{640\ C_p}{t_p\ (adjusted)}$$

2. Determination of Snyder's Unit Hydrograph Shape—The Snyder's methodology is incapable of yielding a continuous and complete description of the unit hydrograph shape. In HEC-HMS determination of the continuous shape of the unit hydrograph is carried out with an iterative procedure using the Clark unit hydrograph methodology.

Application of Snyder's Unit Hydrograph HEC-HMS requires two Snyder's parameters—$t_p$ and $C_p$. These will be determined as follows:

a. $C_p$—It has been determined that in the Highland Village area, $C_p$ shall have a value of 0.719. The parameter $C_p$ is sometimes labeled as $C_p$ 640, and its value for the Highland Village area is 460.0

b. tp— Will be determined using the percent urbanization curves developed by the U.S. Army (Corps) and presented at the conclusion of this section of the manual. This is carried out as follows:

- Step 1—Determine what percent of the watershed has clay soils and what percent has sand soils.
- Step 2 – Determine the value of

$$\frac{L\,L_{ca}}{S_{st}^{1/2}}$$

where L, $L_{ca}$ and $S_{st}$ are as described above.

- Step3—Using the curve in Figure 2-2, determine the lag time (hours) for the given percent urbanization. Multiply each value of the lag by its respective percent of occurrence and sum them to determine the weighted lag $t_p$.

### 2.5.2 Routing the Flood Hydrograph

As a flood wave passes downstream through a channel or detention facility, its shape is altered due to the effects of storage. The procedure for determining how the shape of the flood hydrograph changes is termed flood routing.

Stream Routing vs. Reservoir Routing—Flood routing can be classified into two broad but related categories: open channel stream routing and reservoir routing. Reservoir routing is often used to determine the effect of storm water detention on a runoff hydrograph. Open channel stream routing is used to determine the changing shape of the runoff hydrograph as a function of the channel geometry or storage capacity.

## 2.6 RATIONAL METHOD

### 2.6.1 General

The Rational Method represents an accepted method for determining peak storm runoff rates for small watersheds that have a drainage system unaffected by complex hydrologic situations such as ponding areas, storage basins and watershed transfers (overflows) of storm runoff. It is generally recommended that the Rational Method be used for areas less then 400 acres in the City of Highland Village.

### 2.6.2 Definition of Rational Formula

The Rational Method is based on the direct relationship between rainfall and runoff, and is expressed by the following equation:

$$Q = CiA$$

where: Q is defined as the peak rate of runoff in cubic feet per second (cfs). Actually, Q is in units of inches per hour per acre. Since this rate of in/hr/ac differs from cfs by less than 1%, the more common cfs is used.

C is the runoff coefficient, a dimensionless coefficient of runoff which represents the ratio of peak discharge to rainfall intensity (i).

i is the average intensity of rainfall in inches per hour for a period of time equal to the critical time of flow concentration for the drainage area to the point of design.

A is the area in acres contributing runoff to the point of design during the critical time of concentration.

### 2.6.3. Assumptions of Rational Method

Basic assumptions associated with the Rational Method are:

1. The computed peak rate of runoff at the design point is a function of the average rainfall rate during the time of concentration to that point.

2. The frequency or recurrence interval of the peak discharge is equal to the frequency of the average (uniform) rainfall intensity associated with the critical time of concentration (duration).

3. The ratio of runoff to rainfall, C, is uniform during the storm duration.

4. Rainfall intensity is uniform during the storm duration.

5. The contributing area is the area that drains to the design point within the critical time of concentration.

### 2.6.4 Runoff Coefficient (C)

In relating peak rainfall rates to peak discharges, the runoff coefficient "C" in the Rational Formula is dependent on the character of the drainage area's surface and type of development in the drainage area. The rate and volume of a storm's rainfall that reaches an area's storm sewer system depends on the relative porosity (imperviousness), ponding character, slope and conveyance properties of the surface. Soil types, vegetation conditions and impervious surfaces, such as pavements and buildings, are among the major determining factors in selecting an area's "C" factor. Onsite inspections and aerial photographs may prove valuable in estimating the nature of the surface within the drainage area.

It should be noted that the runoff coefficient "C" is the variable of the Rational Method which is least susceptible to precise determination. Proper use requires judgment and experience on the part of the engineer.

Zoning and land use maps should be used to select the appropriate type of development activity which exists, or is proposed, in a drainage area. Coefficients for specific land use types can be used to develop and composite runoff coefficient based in part on the percentage of different types of land uses in the drainage area.

Table 2-4 presents recommended ranges for "C" values for various land uses and specific surface types. Runoff coefficients should always be selected based on a fully-urbanized drainage area. The "C" values from Table 2-4 are then calculated through areal weighting equation:

$$C = \sum \frac{(C_x\, A_x)}{A_{total}}$$

| | | | |
|---|---|---|---|
| where | $C_x$ | = | "C" value from Table 2-4 for a specific item |
| | $A_x$ | = | Area corresponding to the C value selected |
| | $A_{total}$ | = | The total area being calculated |

**TABLE 2-4**
RUNOFF COEFFECIENTS FOR RATIONAL FORMULA

| Type of Drainage Area | Runoff Coefficient, C* |
|---|---|
| Business: | |
| Commercial Areas | 0.70 - 0.95 |
| Neighborhood Areas | 0.65 - 0.85 |
| Residential: | |
| Single-family areas | 0.50 |
| Multi-units, detached | 0.50 - 0.60 |
| Multi-units, attached | 0.60 - 0.85 |
| Industrial: | |
| Light Areas | 0.85 - 0.90 |
| Heavy Areas | 0.90 |
| Parks: | 0.30 |
| Unimproved Areas: | |
| Sand or Sandy Loam Soil, 0-3% | 0.15 - 0.20 |
| Sand or Sandy Loam Soil, 3-5% | 0.20 – 0.30 |
| Black or Loessial Soil, 0-5% | 0.20 - 0.30 |
| Black or Loessial Soil, > 5 | 0.30 – 0.50 |
| Steep Grassed Slopes | 0.65 |
| Zoning: | |
| Single Family Residential (SF) | 0.50 |
| Two Family Residential (2-F) | 0.50 – 0.60 |
| Multi-Family Residential (MF) | 0.50 – 0.85 |
| Neighborhood Service (NS) | 0.80 – 0.90 |
| Office (O) | 0.70 – 0.85 |
| Retail (R) | 0.70 – 0.90 |
| Highway Commercial (HC) | 0.90 – 0.95 |
| Commercial (C) | 0.90 |
| Light Industrial (LI) | 0.85 – 0.90 |
| Streets (Pavement Areas Only): | |
| Asphaltic | 0.95 |
| Concrete | 0.95 |
| Brick | 0.90 |

*Higher values are usually appropriate for steeply sloped areas and longer return periods because infiltration and other losses have a proportionally smaller effect on runoff in these cases.

### 2.6.5 Rainfall Intensity (i)

Rainfall intensity (i) is the average rainfall rate in inches per hour which is considered for a particular area or subarea, and is selected on the basis of design rainfall duration and design frequency of occurrence. The design rainfall duration is equal to the critical time of concentration for all portions of the drainage area under consideration that contribute flow to the design point during the critical time of concentration. All new drainage structures in the City of Highland Village will be designed to accommodate a 5-year, 10-year, 25-year, 50-year and 100-year design storm. The design rainfall intensity to be used in the Rational equation is determined for a given duration and frequency from the frequency/duration/intensity curves presented in Figure 2-1.

Runoff from a watershed usually reaches a peak at the time when the entire drainage area is contributing, in which case the time of concentration is the time for water to flow from the most remote point in the watershed to the design point,

The time of concentration to any point in a storm drainage system is a combination of the "inlet time" and the "time of flow in the conduit."

The inlet time is the time for water to flow over the surface to the storm sewer inlet. Inlet time decreases as the slope and the imperviousness of the surface increase, and it increases as the distance over which the water has to travel increases and as retention by the contact surfaces, increases. The inlet times provided in Table 2-5 for various land uses shall be used as minimum values.

If the characteristics of a drainage area indicate that the inlet time may exceed the value provided in Table 2-5, the design engineer may determine the inlet time by direct computation using Figure 2-1.

| **TABLE 2-5**<br>MINIMUM INLET TIME OF CONCENTRATION | | |
|---|---|---|
| Type of Drainage Area | Minimum inlet Time of Concentration (minutes) | Maximum inlet Time of Concentration (minutes) |
| Parks and Open Areas | 20 | 40 |
| Residential | 15 | 30 |
| Industrial | 10 | 25 |
| Commercial | 10 | 25 |
| Pasture | 15 | 35 |
| Woods | 15 | 35 |
| Cultivated | 20 | 40 |
| Shopping Centers | 10 | 15 |
| Paved Areas | 10 | 15 |
| Schools | 15 | 30 |

Source: HEC 22

### 2.6.6 Drainage Area (A)

The size and shape of the drainage area may be determined through the use of topographic maps, supplemented by field surveys where topographic data has changed or where the contour interval is too great to distinguish the direction of flow. A drainage area map will be provided for each project. The drainage area contributing to the system being designed and the drainage subarea contributing to each inlet point shall be identified. The outlines of the drainage divides must follow actual lines rather than the artificial land divisions. The drainage divide lines are determined by the pavement slopes, locations of downspouts, grading of lawns and other features that are introduced by the urbanization process.

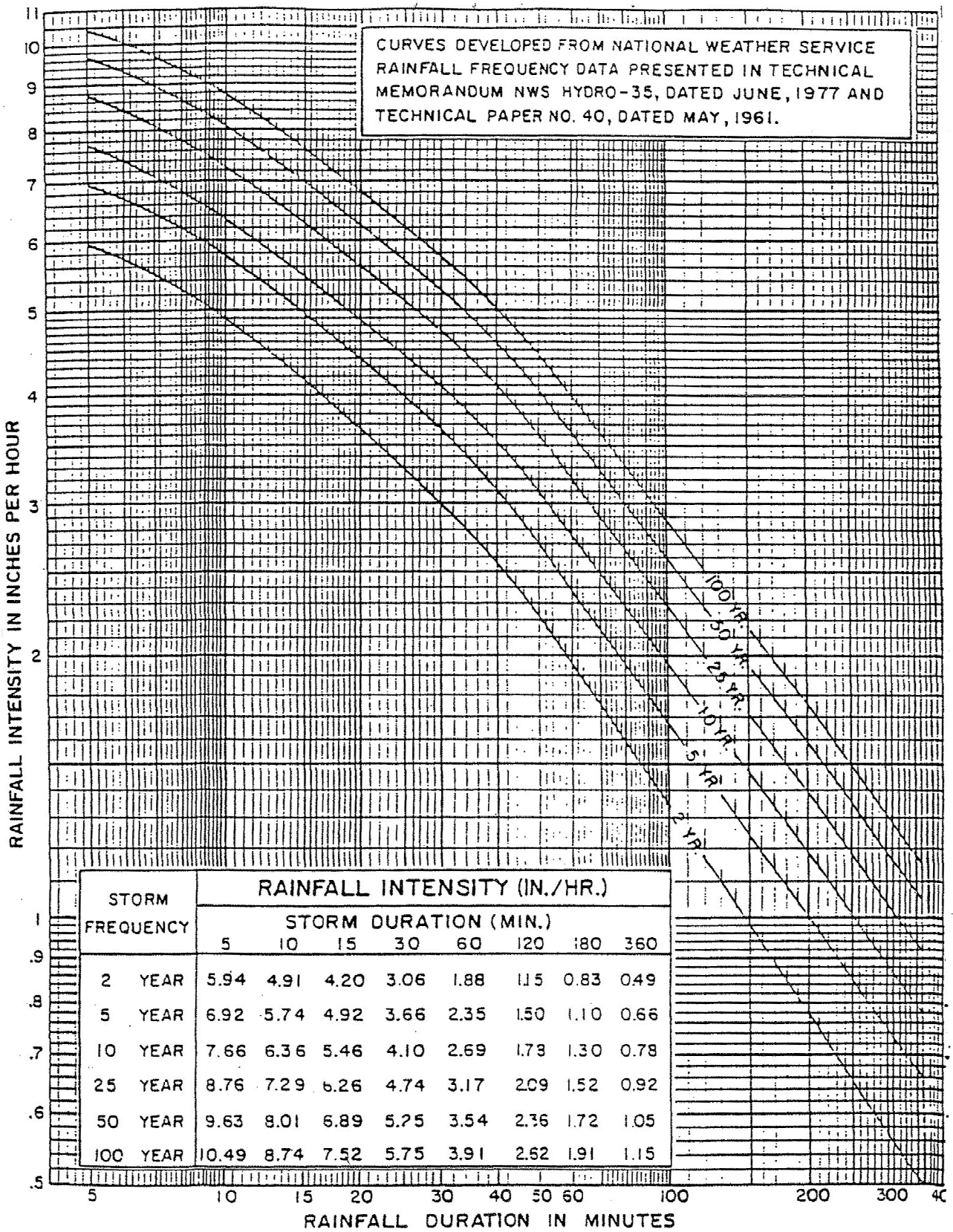


| STORM FREQUENCY | RAINFALL INTENSITY (IN./HR.) | | | | | | | |
|---|---|---|---|---|---|---|---|---|
| | STORM DURATION (MIN.) | | | | | | | |
| | 5 | 10 | 15 | 30 | 60 | 120 | 180 | 360 |
| 2 YEAR | 5.94 | 4.91 | 4.20 | 3.06 | 1.88 | 1.15 | 0.83 | 0.49 |
| 5 YEAR | 6.92 | 5.74 | 4.92 | 3.66 | 2.35 | 1.50 | 1.10 | 0.66 |
| 10 YEAR | 7.66 | 6.36 | 5.46 | 4.10 | 2.69 | 1.73 | 1.30 | 0.78 |
| 25 YEAR | 8.76 | 7.29 | 6.26 | 4.74 | 3.17 | 2.09 | 1.52 | 0.92 |
| 50 YEAR | 9.63 | 8.01 | 6.89 | 5.25 | 3.54 | 2.36 | 1.72 | 1.05 |
| 100 YEAR | 10.49 | 8.74 | 7.52 | 5.75 | 3.91 | 2.62 | 1.91 | 1.15 |

RAINFALL CURVES
FOR
HIGHLAND VILLAGE, TEXAS

FIGURE 2-1

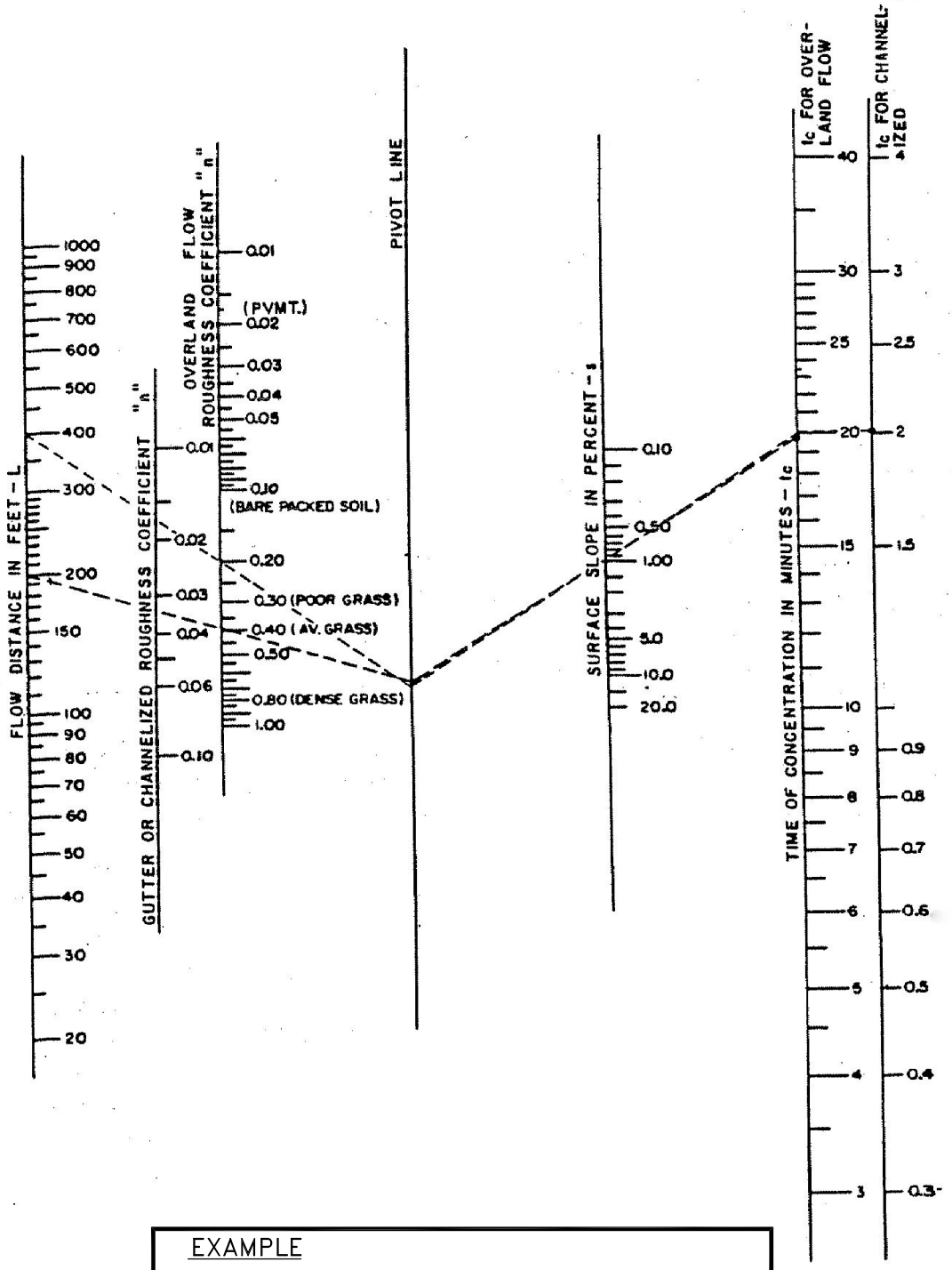


EXAMPLE

| OVERLAND FLOW | GUTTER FLOW |
|---|---|
| L = 200' | L = 400' |
| n = 0.40 (AV. GRASS) | n = 0.0175 |
| s = 1.0% | s = 1.0% |
| t = 20 MIN. | t = 2.0 MIN. |

TOTAL TIME OF CONCENTRATION =
20.0 + 2.0 = 22.00 MIN.

City of Highland Village

TIME OF CONCENTRATION
FOR
SURFACE FLOW

FIGURE 2-2

## 3.0 FLOW IN STREETS

### 3.1 GENERAL

The permissible flow of water in the streets should be related to the allowable extent and frequency of interference to traffic and the likelihood of flood damage to surrounding property. Interference to traffic is regulated by design limits on the spread of water into traffic lanes.

The design storm to be used for determining the flow of stormwater in streets shall be the 100-year design storm.

Curbs shall be a minimum height of 6" measured from the flow line of the gutter to the top of curb.

#### 3.1.1 Interference Due to Flow in Streets

Water which flows in a street, whether from rainfall directly onto the pavement surface or overland flow entering from an adjacent land areas, will flow in the gutters of the street until it reaches an overflow point or some outlet, such as a storm sewer inlet. As the flow progresses downhill and additional areas contribute to the runoff, the width of flow will increase and progressively encroach into the traffic lanes. Field observations show that vehicles will crowd adjacent lanes to avoid curb flow.

As the width of flow increases further, it reaches a point where the street loses its effectiveness as a traffic carrier. During these periods, it is imperative that emergency vehicles such as fire trucks, ambulances and police cars be able to traverse the street.

#### 3.1.2 Interference Due to Ponding

Storm runoff ponded on the street surface because of grade changes or the crown slope of intersecting streets has a substantial effect on the street carrying capacity. Because of the localized nature of ponding, vehicles moving at a relatively high speed may enter a pond. The manner in which ponded water affects traffic is essentially the same as for curb flow; that is, the width of spread into the traffic lanes is critical. In the case of low points, the designer shall ensure that the spread of water in the street does not exceed permissible levels on either side of the low point.

### 3.1.3 Interference Due to Water Flowing Across Traffic Lanes

Whenever storm runoff, other than limited sheet flow, moves across a traffic lane, a serious and dangerous impediment to traffic flow occurs. The cross-flow may be caused by super-elevation of a curve, a street intersection, overflow from the higher gutter on a street with cross-fall, or simply poor street design.

The depth and velocity of cross-flows shall be maintained within such limits that they will not have sufficient force to threaten moving traffic.

### 3.1.4 Effect on Pedestrians

In areas with heavily used sidewalks, splash due to vehicles moving through water adjacent to the curb is a serious problem.

Streets should be classified with respect to pedestrian traffic as well as vehicular traffic. As an example, streets which are classified as residential for vehicles and located adjacent to a school are arterials for pedestrian traffic. Allowable width of gutter flow and extent of ponding should reflect this fact.

## 3.2 PERMISSIBLE SPREAD OF WATER

### 3.2.1 Primary Arterial Streets (With A Median)

Inlets shall be spaced at such an interval as to provide a minimum of one clear traffic lane (8 feet) in each direction during the peak flows of the 100-year design storm, provided that flow in the gutter does not exceed 5 inches.

### 3.2.2 Minor Arterial Streets (Without A Median)

The flow of water in gutters of a minor arterial street shall be limited so that two standard lanes (8 feet each) in both directions will remain clear during the peak runoff from the 100-year design storm, provided the depth of flow does not exceed the top of curb.

### 3.2.3 Collector Streets

The flow of water in gutters of a collector street shall be limited so that one standard lane (8 feet) will remain clear during the peak runoff from the 100-year design storm, provided the depth of flow does not exceed the top of curb or 45 cubic feet a second.

### 3.2.4 Residential Streets

For urban residential streets where the parkways (right of ways) slope toward the street (away from houses and other structures) the spread of water in the gutters shall be limited such that the depth of flow during the peak runoff from the 100-year design storm does not exceed 1 inch over the top of curb. Inlets shall be located wherever the gutter flow exceeds the permissible spread of water.

For urban residential streets where the parkways (right of ways) slope away from the street (toward houses and other structures) the spread of water in the gutters shall be limited such that the depth of flow during the peak runoff from the 100-year design storm does not exceed the top of curb. Inlets shall be located wherever the gutter flow exceeds the permissible spread of water.

For rural residential streets without curbs or gutters the storm water runoff must be contained completely in the roadside drainage system (see 3.2.5 Rural Streets).

### 3.2.5 Rural Streets

Rural streets generally consist of asphalt roads with no curb and bar ditch drainage. These areas accommodate storm water through a bar ditch or swale system. The spread of water in these systems shall be limited to the top of the ditch or swale. For more information on sizing and maximum capacity of swales and ditches refer to Section 7 (Flow in open channels).

### 3.2.6 Alley Ways

The flow of water in the alleys shall be limited so that the capacity of the alley is not exceed.

### 3.2.7 Parking Lots

The flow of water in parking lot areas shall be limited so that the peak runoff from the 100-year design storm does not exceed the top of the curb with a maximum ponding at low points of 1 foot.

## 3.3 MINIMUM AND MAXIMUM VELOCITIES

### 3.3.1 Longitudinal Slope

Longitudinal slopes are more important for curb pavement due to water being constrained inside the roadway. However, flat grades on uncurbed pavement can have the same problem as curb if vegetation is allowed to build up along the pavement edge. For this reason a desirable minimum slope is 0.005 feet/foot (0.5%)

To ensure cleaning velocities at very low flows the street gutter shall have a minimum longitudinal slope of 0.004 feet/foot (0.4%) or the slope that will produce a velocity of 2.5 fps or higher. The maximum velocity of curb flow shall be 10fps.

Shallow concentrated flow can be calculated using the formula below for short distances of up to 400 feet.

$$V=3.28\ k\ S_p^{1/2}$$

| | | | |
|---|---|---|---|
| where | $V$ | = | Velocity (ft/s) |
| | $k$ | = | intercept coefficient from Table 3-1 |
| | $S_p$ | = | Slope (%) |

| **Table 3-1**<br>INTERCEPT COEFFICIENTS | |
|---|---|
| Land Cover/Flow Regime | k |
| Forest with heavy ground litter; hay meadow (overland flow) | 0.076 |
| Trash fallow or minimum tillage cultivation; contour or strip cropped; woodland (overland flow) | 0.152 |
| Short grass pasture (overland flow) | 0.213 |
| Cultivated straight row (overland flow) | 0.274 |
| Nearly bare and untilled (overland flow); alluvial fans in western mountain regions | 0.305 |
| Grassed waterway (shallow concentrated flow) | 0.457 |
| Unpaved (shallow concentrated flow) | 0.491 |
| Paved area (shallow concentrated flow); small upland gullies | 0.619 |

Source: iSWM Criteria Manual

Along sharp horizontal curves, peak flows tend to jump behind the curb line at driveways and other curb breaks. Water running behind the curb line can result in considerable damage due to erosion and flooding. In a gutter which has a slope greater than 0.06 feet/foot (6%) and a radius of 400 feet or less, the 100 year design flow shall not exceed 4 inches at the curb.

### 3.3.2 Cross (Transverse) Slope

Cross (Transverse) slopes are important to take sheet flow in the street to an acceptable drainage facility. Cross slopes are a compromise between the need for reasonably steep slopes for drainage and relatively flat cross slopes for driver comfort and safety. The normal pavement cross (transverse) slope shall correspond to Table 3-2 below.

**Table 3-2**
NORMAL PAVEMENT CROSS SLOPES

| Surface Type | Range in Rate of Surface Slope m/m (ft/ft) |
|---|---|
| High-Type Surface | |
| 2-lanes | 0.015 - 0.020 |
| 3 or more lanes, each direction | 0.015 minimum; increase 0.005 to 0.010 per lane; 0.040 maximum |
| Intermediate Surface | 0.015 - 0.030 |
| Low-Type Surface | 0.020 - 0.060 |
| Shoulders | |
| Bituminous or Concrete | 0.020 - 0.060 |
| With Curbs | ≥ 0.040 |

Source: iSWM Criteria Manual

Additional guidelines are:

1. Although not widely encouraged, inside lanes can be sloped toward the median if conditions warrant.
2. Median areas should not be drained across travel lanes.
3. Number and length of flat pavement sections in cross slope transition areas should be minimized. Consideration should be given to increasing cross slopes in sag vertical curves, crest vertical curves, and in sections of flat longitudinal grades.
4. Shoulders should be sloped to drain away from the pavement, except with raised, narrow medians and super elevations.

## 3.4 DESIGN METHOD

### 3.4.1 Straight Crowns

Flow in gutters which are on straight crown pavements is normally calculated by using Manning's Equation for uniform flow in pavement gutters or triangular channels. The equation is:

$$Q_o = \frac{0.56\ (S_x)1.67\ (S_L)^{1/2}\ (Y_o)^{8/3}}{n}$$

where:

| | | |
|---|---|---|
| $Q_o$ | = | gutter discharge (cfs); |
| $S_x$ | = | street cross (transverse) slope (ft/ft) |
| $S_L$ | = | street or gutter longitudinal slope (ft/ft) |
| n | = | roughness coefficient from Table 3-3 |
| $Y_o$ | = | depth of flow in gutter (ft) |

The monograph in Figure 3-1 provides for direct solution of flow conditions for triangular channels most frequently encountered in urban drainage design.

### 3.4.2 Parabolic Crowns

Flow in gutters which are on parabolic crown pavements is normally calculated by using Manning's Equation for uniform flow in pavement gutters or by using Figures 3-2 and 3-3. The equation is:

$$Q_o = \frac{1.486\, A\, R^{2/3}\, (S_L)^{1/2}}{n}$$

where:

| | | |
|---|---|---|
| $Q_o$ | = | Alley discharge (cfs) |
| $S_L$ | = | street or gutter slope (ft/ft) |
| n | = | roughness coefficient from table 3-3 |
| A | = | cross section flow area ($ft^2$) |
| | = | $\left[\frac{W}{2}\right]\left[\frac{4\,C}{W^2}\right](x^2)\,dx$ |
| W | = | width of street (ft) |
| C | = | crown height (ft) |
| R | = | hydraulic radius (ft) |
| | = | $\frac{A}{P}$ |
| P | = | wetted perimeter (ft) |

**Table 3-3**
**MANNING'S n FOR STREET AND PAVEMENT GUTTERS**

| Type of Gutter or Pavement | Manning's n |
|---|---|
| Concrete gutter, troweled finish | 0.012 |
| Asphalt Pavement: | |
| Smooth texture | 0.013 |
| Rough texture | 0.016 |
| Concrete gutter-asphalt pavement: | |
| Smooth | 0.013 |
| Rough | 0.015 |
| Concrete pavement: | |
| Float finish | 0.014 |
| Broom finish | 0.016 |
| For gutters with small slope, where sediment may accumulate, increase above values of "n" by 0.002. | |

Sources: USDOT, FHWA, HDS-3

### 3.4.3 Alleys

The flows created by the 100-year design storm shall be contained within the capacity of all paved alleys. Alley capacities shall be checked at all alley turns and "T" intersections to determine if curbing is needed or grades should be flattened. Curbing shall be required for a sufficient length on either side of a curb inlet to contain the flow within the alley pavement limits.

Flow across alley pavement is normally calculated by using Manning's Equation for uniform flow across pavement or by using Figure 3-4. The equation is:

$$Q_o = \frac{1.486\ A\ R^{2/3}\ (S_L)^{1/2}}{n}$$

| | | | |
|---|---|---|---|
| where: | $Q_o$ | = | Alley discharge (cfs) |
| | $S_L$ | = | street or gutter slope (ft/ft) |
| | n | = | roughness coefficient from Table 3-3 |
| | A | = | cross section flow area ($ft^2$) |
| | | = | $\left[\frac{W}{2}\right]\left[\frac{4\ C}{W^2}\right]\ (x^2)\ dx$ |
| | W | = | width of street (ft) |
| | C | = | crown height (ft) |
| | R | = | hydraulic radius (ft) |
| | | = | $\frac{A}{P}$ |
| | P | = | wetted perimeter (ft) |

EXAMPLE

**Known:**

Major Street, Type MB
Pavement Width = 33'
Gutter Slope = 1.0%
Pavement Cross Slope = 1/2"/1'
Depth of Gutter Flow = .5'

**Find:**

Gutter Capacity

**Solution:**

Enter Graph at .5'
Intersect Cross Slope = 1/2"/1'
Intersect Gutter Slope = 1.0%
Read Gutter Capacity = 12 c.f.s.

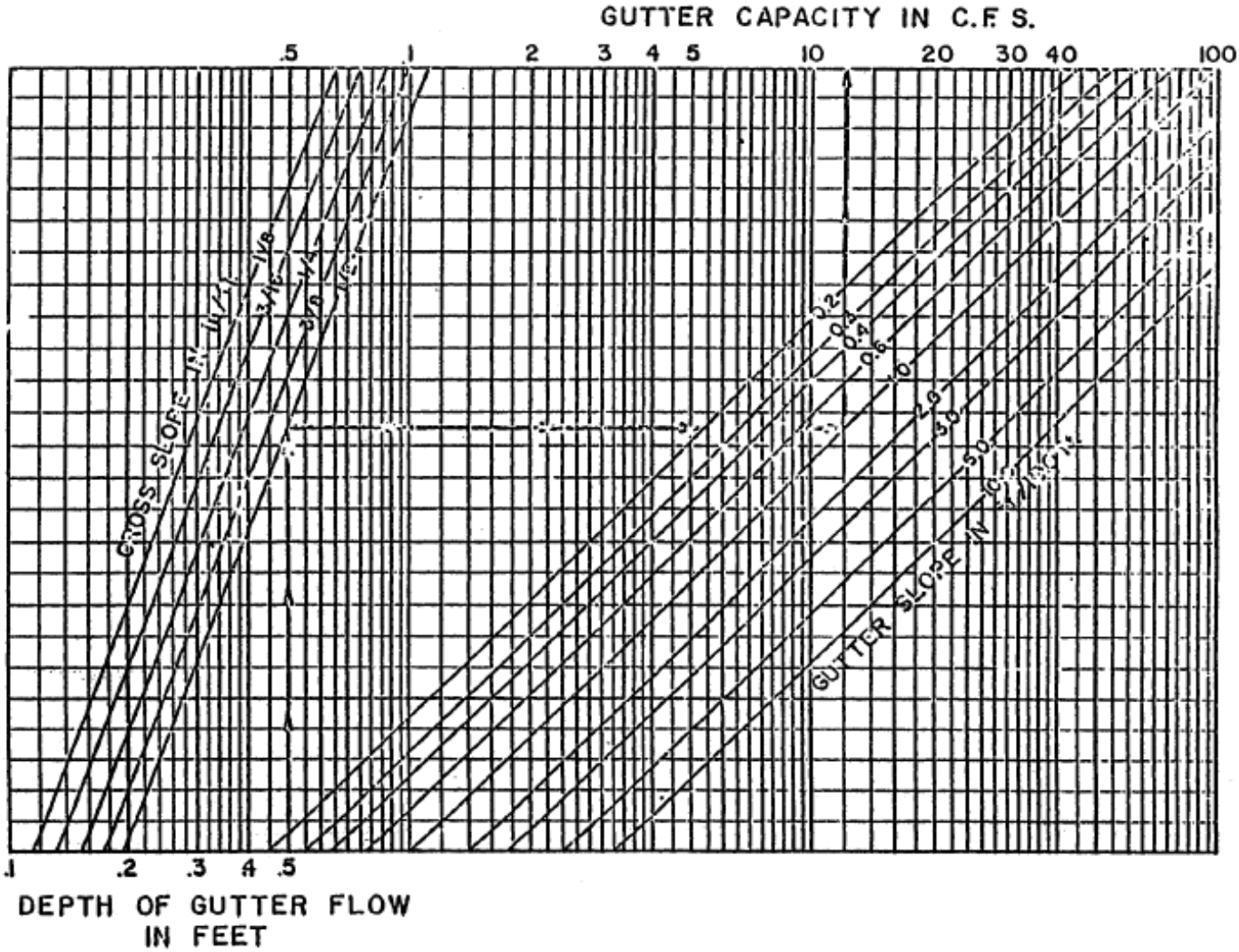

CAPACITY OF
TRIANGULAR GUTTERS

(Roughness Coefficient n = .0175)

| | | |
|---|---|---|
| City of Highland Village | CAPACITY OF TRIANGULAR GUTTERS | FIGURE 3-1 |

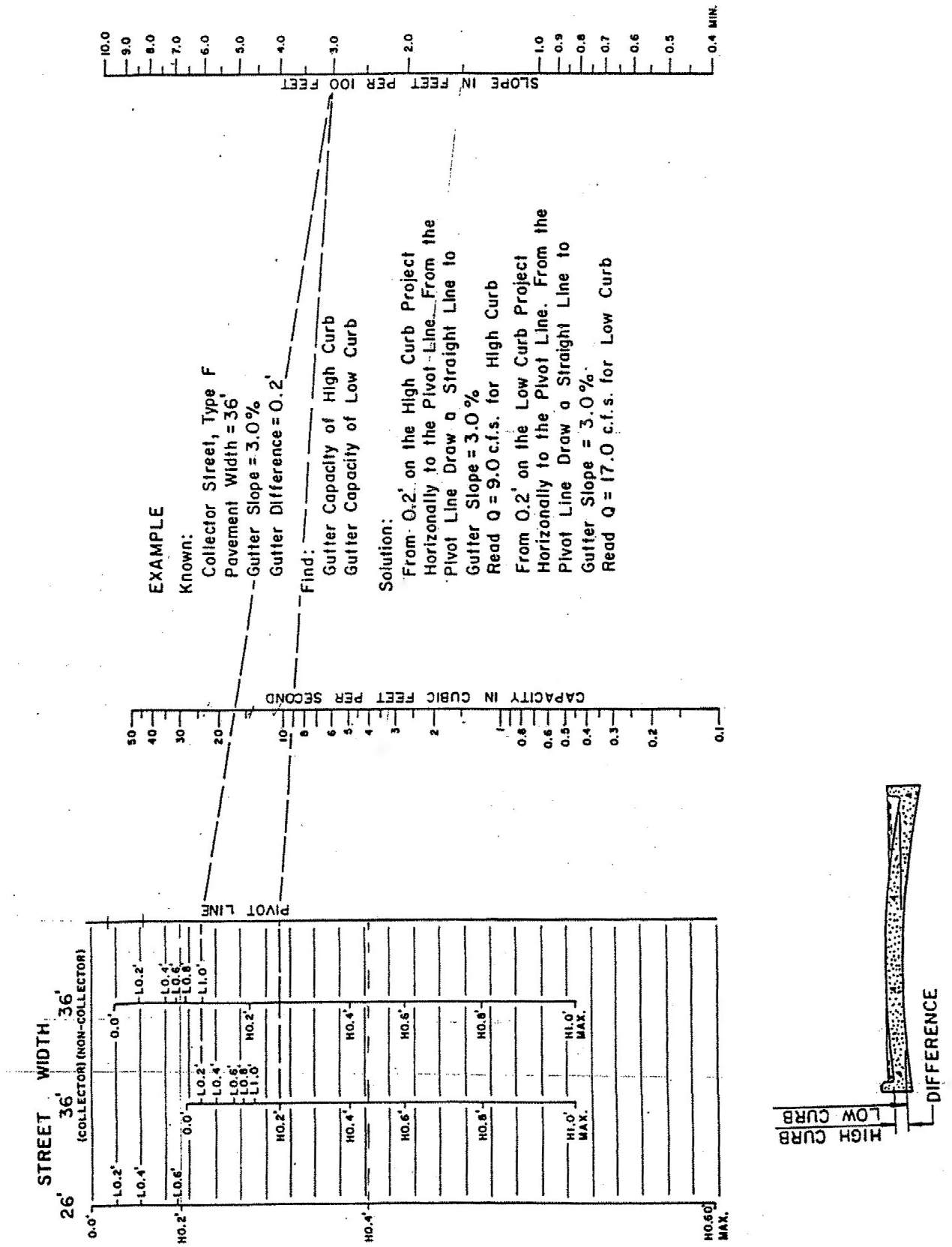


CAPACITY OF
PARABOLIC GUTTERS
26' AND 36' STREET WIDTHS

FIGURE 3-2

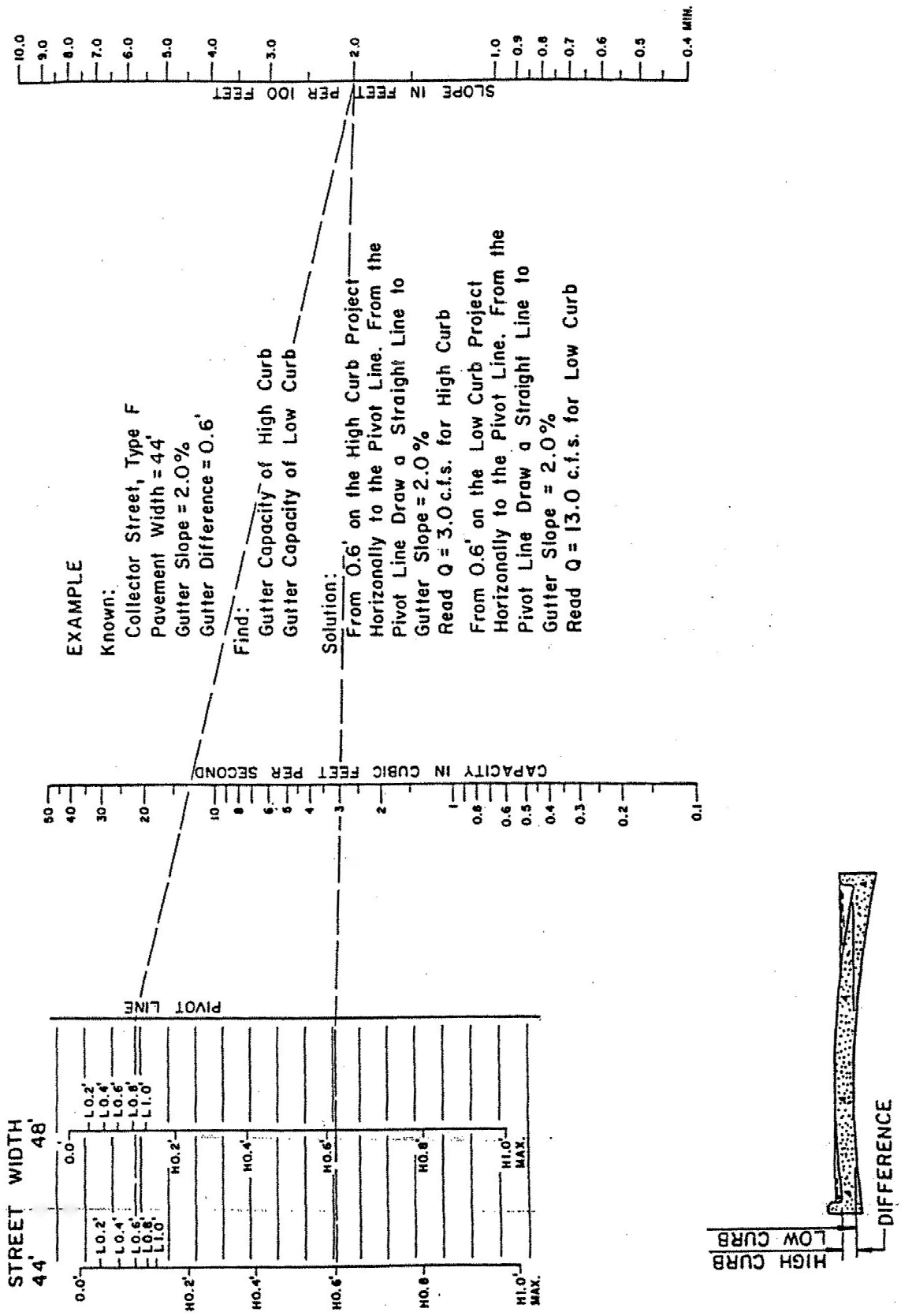


CAPACITY OF
PARABOLIC GUTTERS
44' AND 48' STREET WIDTHS

FIGURE 3-3

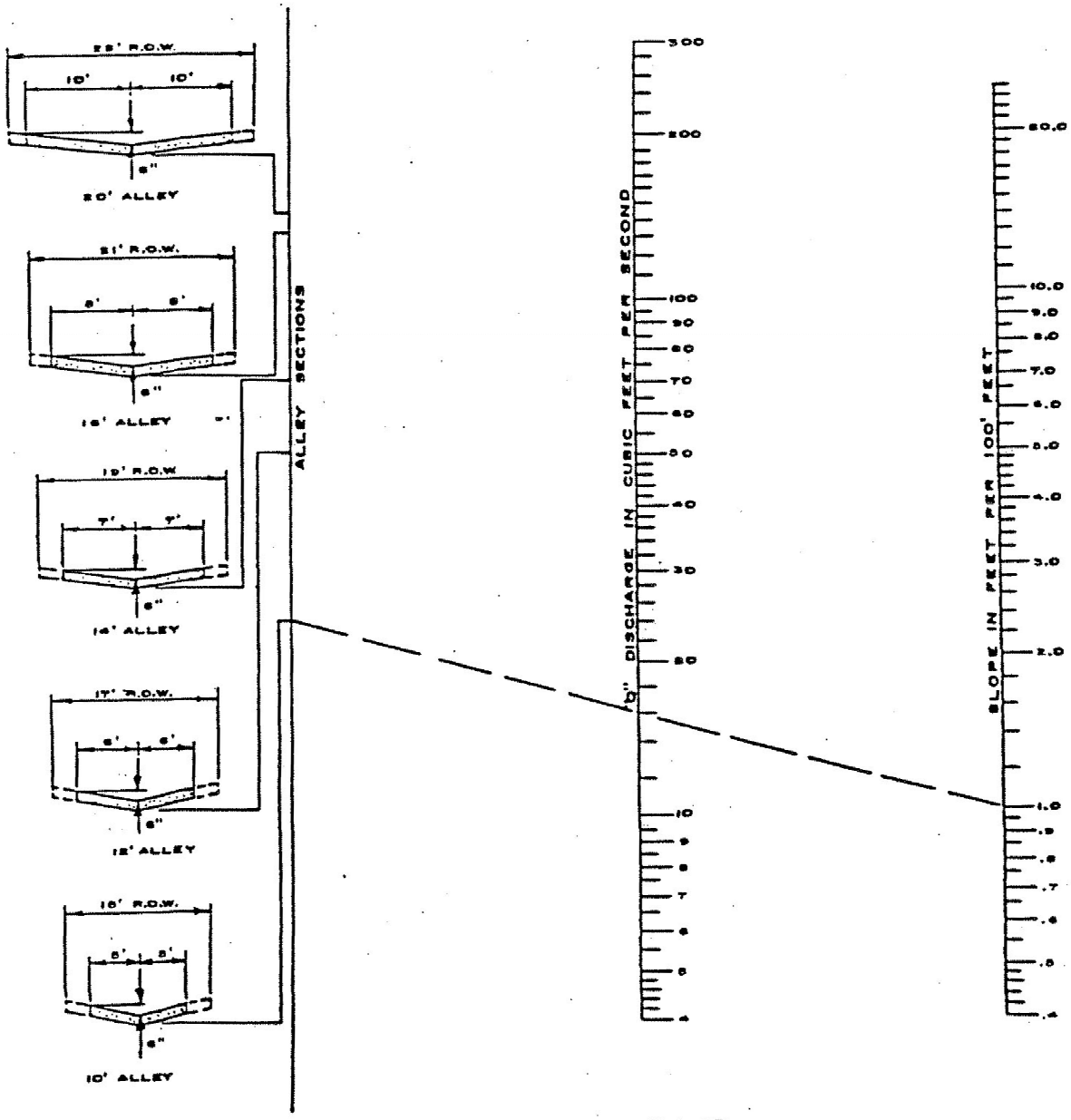


NOTE:

1. All Alley Capacities Are 2½" Above Paving Edge.

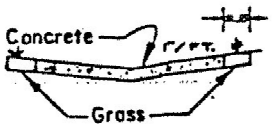


2. The Capacities Obtained From This Nomograph are Based on a Straight Horizontal Alignment. Curved Alignments May Result in Reduced Capacity.

## EXAMPLE

KNOWN:
Alley width = 10'
Alley depression = 5"
Gutter Slope = 1.0%

FIND:
Gutter Flow (Q)

SOLUTION:
Connect the 10' alley section with slope = 1.0%. Read Q = 16 c.f.s.

| | | |
|---|---|---|
| Highland Village | CAPACITY OF ALLEY SECTION | FIGURE 3-4 |

## 4.0 STORM DRAIN INLETS

### 4.1 GENERAL

The primary purpose of storm drain inlets is to intercept excess surface runoff and deposit it in a drainage system, thereby reducing the possibility of surface flooding.

The most common location for inlets is in streets which collect and channelize surface flow, making it convenient to intercept. Because the primary purpose of streets is to carry vehicular traffic, inlets must be designed so as not to conflict with that purpose.

The following guidelines shall be used in the design of inlets to be located in streets.

1. When recessed inlets are used, they shall not interfere with the intended use of the sidewalk.
2. Designing and location of inlets shall take into consideration pedestrian and bicycle traffic.
3. Use of depressed inlets shall not be allowed unless approved by the Director of Public Works/City Engineer.
4. All points of concentration from offsite drainage shall be picked up by an inlet or headwall before flow enters the street or crosses the sidewalk.
5. Inlets shall generally be provided to intercept runoff on the upstream side of street intersections. Wherever possible, the end of the inlet shall be located 10 feet from the curb radius.
6. The design storm to be used for all inlets and other stormwater collection facilities shall be the 100-year design storm.
7. Inlets shall be located so as to provide minimum interference with adjacent property.
8. Inlet locations directly above storm sewer lines shall be avoided.
9. Inlet design and location must be compatible with the criteria established in Section 3.0 of this manual.

## 4.2 CLASSIFICATION

### 4.2.1 Inlet Classes

Inlets can be classified into 5 classes. See Figure 4-1 and Table 4-1 for more detail.

1. Grate inlets
2. Curb-opening inlets
3. Drop inlets
4. Combination inlets
5. Slotted drain inlets

Grate inlets perform over a wide range of gutter grades but tend to lose capacity as the velocity of the water increase. The advantage of grate inlets is they can be installed where the water is flowing. The disadvantage is that they are prone to clogging. In addition, use of grate inlets should be discouraged in streets that accommodate bicycle traffic.

Curb-opening inlets perform best on flatter slopes and in sags. The advantage of a curb-opening is that they can carry significant amounts of floating debris without clogging. The disadvantage is that they loss capacity as the grade increases.

Combination inlets provide the advantages of both curb opening and grate inlets, with the grate acting as the main inlet and the curb opening providing additional flow area in case of grate clogging. When the grate reaches a condition where it can no longer keep up with demand (due to clogging) the curb-opening can intercept the flow until the grate is no longer clogged. Also, use of combination inlets should be discouraged in streets that accommodate bicycle traffic.

Slotted drain inlets can be used in areas where it is necessary to intercept sheet flow. The advantage of slotted drains is their ability to intercept flow over a wide section. When unclogged they have the same hydraulic capacity as a curb-opening. The disadvantage is that they are highly susceptible to clogging due to sediments or debris.

**Table 4-1**
**STORM DRAIN INLETS**

| Inlet Description | Avail. Inlet Sizes | |
|---|---|---|
| 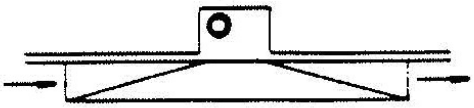 STANDARD CURB OPENING INLET ON GRADE | 4'<br>6'<br>8'<br>10'<br>14' | Residential Street |
| 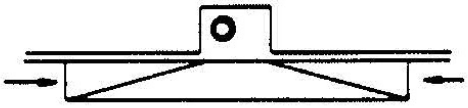 STANDARD CURB OPENING INLET AT LOW POINT | 4'<br>6'<br>8'<br>10'<br>14' | Residential Street |
| 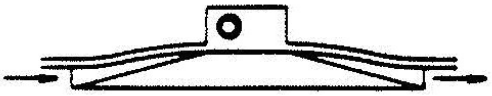 RECESSED CURB OPENING INLET ON GRADE | 4'<br>6'<br>8'<br>10'<br>14' | Collector Streets<br>Minor Arterials<br>Primary Arterials |
| 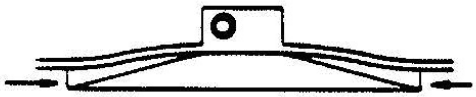 RECESSED CURB OPENING INLET AT LOW POINT | 4'<br>6'<br>8'<br>10'<br>14' | Collector Streets<br>Minor Arterials<br>Primary Arterials |

**Table 4-1 (cont.)**
**STORM DRAIN INLETS (cont.)**

| Inlet Description | Avail. Inlet Sizes | |
|---|---|---|
| COMBINATION INLET ON GRADE | 4'<br>6'<br>8'<br>10' | Combination Inlets to be Used Where Space Behind Curb Prohibits Other Inlets |
| COMBINATION INLET AT LOT POINT | 4'<br>6'<br>8'<br>10' | Combination Inlets to be Used Where Space Behind Curb Prohibits Other Inlets |
| GRATE INLETS | 2 Grate<br>3 Grate<br>4 Grate<br>6 Grate | Grate Inlets to be Used Where Space Restrictions Prohibit Other Inlet Types or at Locations With No Curb |
| 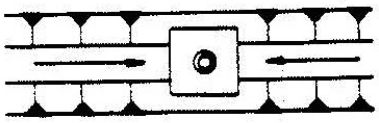 DROP INLET | 2' x 2'<br>3' x 3'<br>4' x 4' | Open Channels |

### 4.2.2 Inlet Locations

Inlets are classified into two major groups: inlets located at the low points and inlets on grade. Each group of inlets includes several varieties. The following are presented here in and are likely to find reasonably wide use (see Table4-1).

- Inlets in Low Points
  1. Curb Opening (recessed and non-recessed) Inlet
  2. Grate Inlet
  3. Combination (grate and curb opening) Inlet
  4. Drop Inlet
  5. Drop (grate covering) Inlet
  6. Slotted Drain Inlet

- Inlets on Grade
  1. Curb Opening (recessed and non-recessed) Inlet
  2. Grate Inlet
  3. Combination (grate and curb opening) Inlet
  4. Slotted Drain Inlet

Inlet computations must be submitted to the Director of Public Works/City Engineer as part of the construction plans for review, approval and permanent record.

## 4.3 INLETS AT LOW POINTS

Inlets shall be located in all street low points to relieve ponding, unless the Director of Public Works/City Engineer approves an alternative outlet for the stormwater. The capacity of inlets in low points must be known in order to determine the depth and width of ponding for a given discharge.

### 4.3.1 Curb Opening Inlets and Drop Inlets at Low Point

Un-submerged curb opening inlets and drop inlets in low points are considered to function as rectangular weirs with a coefficient of discharge of 3.0. Their capacity shall be based on the following equation:

$$Q = 3.087h^{3/2}L$$

| | | | |
|---|---|---|---|
| where: | Q | = | capacity of curb opening inlet or drop inlet (cfs) |
| | h | = | depth of flow at inlet opening (feet)<br>sum of depth of flow y and depth of inlet depression $H_t$ |
| | L | = | length of opening through which water enters the Inlet (feet) |

Where the depth of water is such that the curb inlet is completely submerged, the proper orifice formula should be used in determining the discharge rather than the weir formula. This condition is rare, as the location of inlets should be such as to preclude ponding in sufficient depth to submerge the inlet.

This formula gives the theoretical capacity of curb opening and drop inlets. Since low point inlets are subject to clogging, it is recommended that for practical purposes, the capacity of the grate inlet be taken as 90% of the value given by this formula, or conversely that the length of the curb opening or drop inlet be 10% longer than the theoretical length required when calculated by the above formula.

The capacity of a low point inlet may be determined by use of Figure 4-2, which has been developed from the proceeding equation.

### 4.3.2 Grate Inlets at Low Point

The flow of water through grate openings may be treated in the same manner as the flow of water through rectangular orifices with a coefficient of discharge of 0.60. The capacity can then be computed with the following equation:

$$Q = 4.82Ay^{1/2}$$

| | | | |
|---|---|---|---|
| where: | Q | = | the discharge (cfs) |
| | A | = | the area of orifice (the net area of the openings in the grate) ($ft^2$) |
| | y | = | head on grate (feet) |

This formula gives the theoretical capacity of the grate inlet. Since grate inlets are subject to considerable clogging, it is recommended that for practical purposes, the capacity of the grate inlet be taken as one-half of the value given by this formula, or conversely that the net area of the grate be twice as large as the theoretical area required when calculated by the above formula.

The capacity of a grate inlet in a low point may be determined by use of Figure 4-3, which has been developed from the preceding equation.

### 4.3.3 Combination Inlets at Low Point

The capacity of a combination inlet consisting of a grate and curb opening inlet in a low point shall be considered to be the sum of the 90% capacity as determined for a curb opening inlet and 70% of the capacity grade inlet which operate independently (allowing for reduction due to clogging). The capacity can then be computed with the following equation:

$$Q_t = 0.9\ (3.087h^{3/2}L) + 0.7\ (4.82Ah^{1/2})$$

| | | | |
|---|---|---|---|
| where: | $Q_t$ | = | total capacity of combination inlet (cfs) |
| | h | = | depth of flow at inlet opening (feet) |
| | L | = | length of opening through which water enters the Inlet (feet) |
| | A | = | the area of orifice (the net area of the openings in the grate) ($ft^2$) |

When the capacity of the gutter is not exceeded, the grate inlets accept the major portion of the flow. Under severe flooding conditions, however, the curb inlet will accept most of the flow, this due to the difference in respect to y. Curb opening and drop inlets capacity varies as $y^{3/2}$, while the capacity of the grate inlet varies as $y^{1/2}$.

The capacity of a combination inlet at the low point may be determined by use of Figure 4-4, which has been developed from the preceding equation.

### 4.3.4 Slotted Drain Inlets at Low Point

Slotted drain inlets are used to capture overland flow or sheet flow. They can be used with or without a curbed section with little affect on traffic. When unclogged slotted drain inlets have the same interception rate as a standard curb opening. To calculate the capacity, use the equation for curb opening at the low point in Section 4.3.1. The capacity of the slotted inlet can be determined by the use of Figure 4-16. Just like grate drains, slotted drains are subject to clogging. It is recommended that for practical purposes, the capacity of the grate inlet be taken as one-half of the value given by this formula, or conversely that the net area of the grate be twice as large as the theoretical area required.

## 4.4 INLETS ON GRADE

### 4.4.1 Curb Opening Inlets on Grade

The capacity of a curb inlet, like any weir, depends upon the head and length of overfall. In the case of an undepressed curb opening inlet, the head at the upstream end of the opening is the depth of flow in the gutter. Undepressed inlets do not interfere with traffic and usually are not susceptible to clogging.

The capacity of an undepressed inlet shall be determined by the use of Figures 4-5 through 4-9.

### 4.4.2 Grate Inlets on Grade

Undepressed grate inlets on grade have a greater hydraulic capacity than curb inlets of the same length so long as they remain unclogged. Undepressed grate inlets on grade are inefficient in comparison to grate inlets in low points.

Grates with bars parallel to the curb should always be used for the above described installations because transverse framing bars create splash, which causes the stormwater to jump or ride over the grate. Grates used shall be certified by the manufacturer as bicycle-safe. The capacity of a grate inlet on grade may be determined by the use of Figure 4-11 and 4-13 through 4-15. Grates shall be designed to combat clogging with a 25% reduction in total capacity.

### 4.4.3 Combination Inlets on Grade

Undepressed combination (curb opening and grate) inlets on grade have greater hydraulic capacity than curb inlets or grate inlets of the same length. Generally speaking, combination inlets are the most efficient of the three types of undepressed inlets presented in this manual. Grates with bars parallel to the curb should always be used. The basic difference between a combination inlet and a grate inlet is that the curb opening receives the carryover flow that falls between the curb and the grate.

The capacity of a grate inlet on grade may be determined by the use of Figure 4-10 through 4-12. The capacity of a combination inlet shall be considered to be 45% of the sum of the capacities as determined for a curb opening inlet and a grate inlet (without allowing for reduction due to clogging).

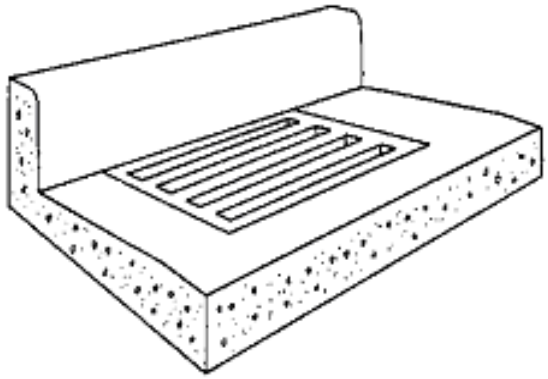

A. GRATE

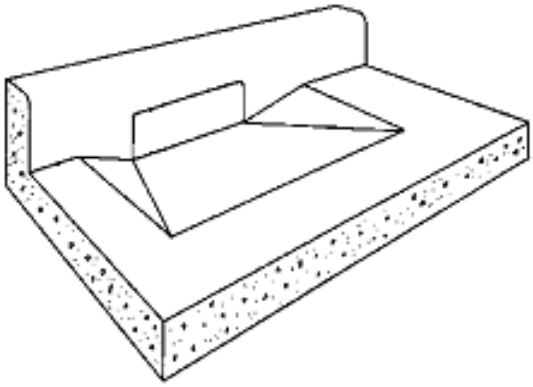

B. CURB-OPENING INLET

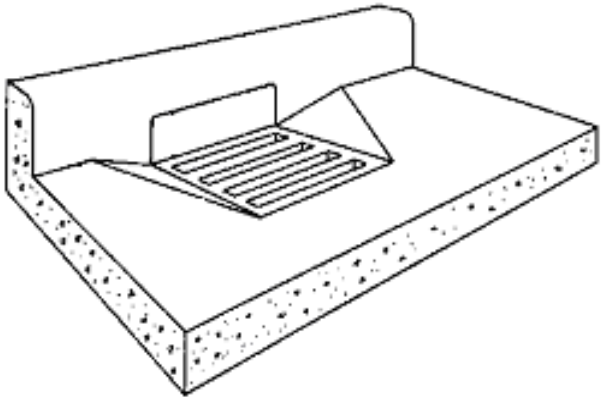

C. COMBINATION INLET

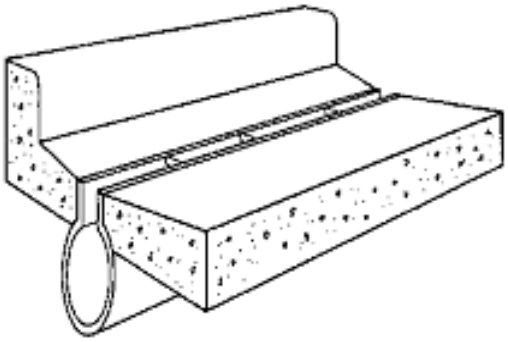

D. SLOTTED DRAIN INLET

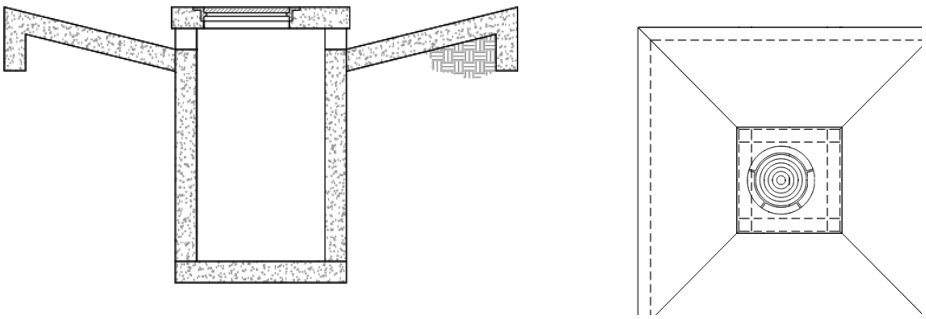

E. DROP INLET WITH APRON

| | | |
|---|---|---|
| City of Highland Village | CLASSES OF STORM DRAIN INLETS | FIGURE 4-1 |

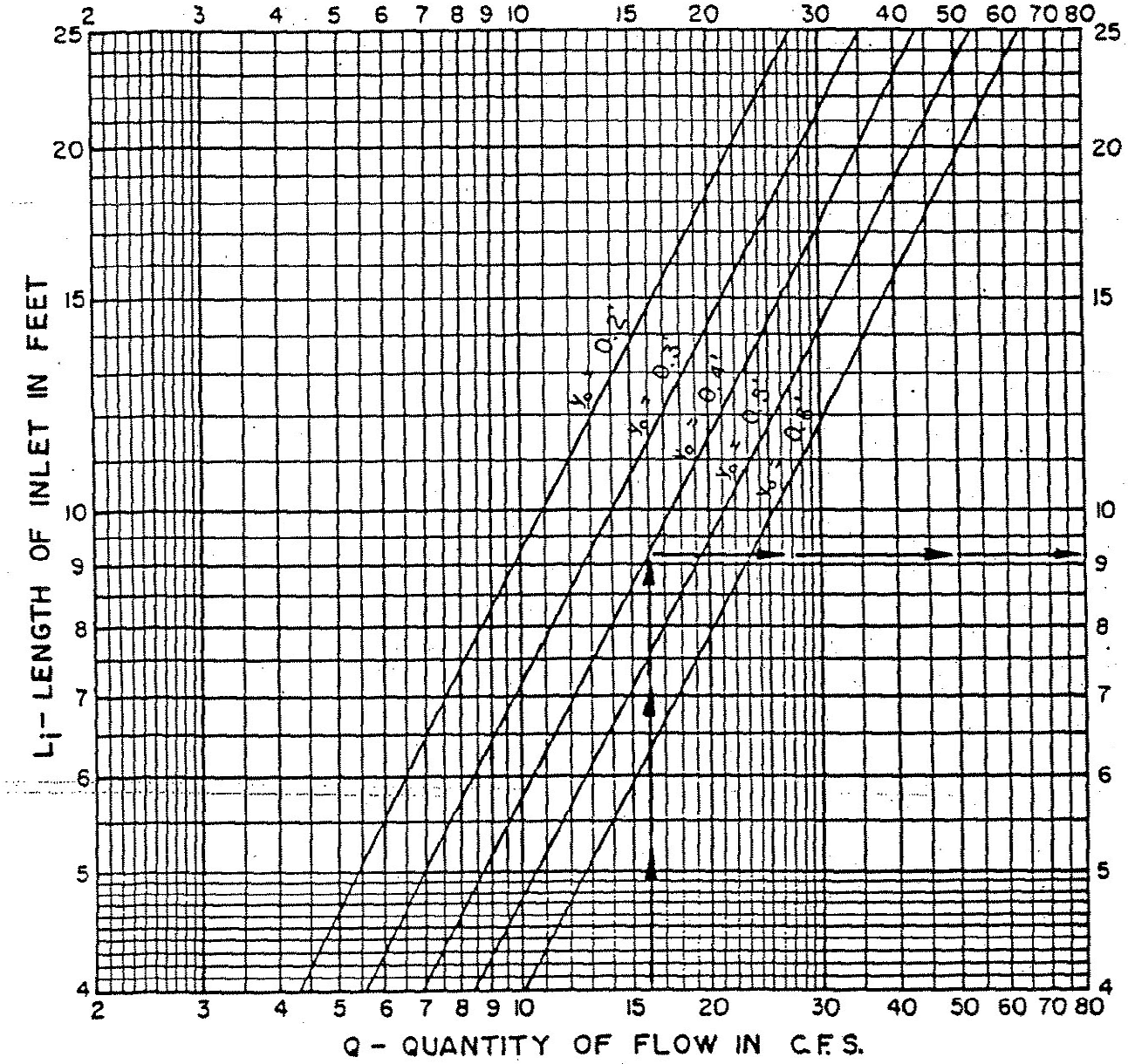


EXAMPLE

Known:

Quantity of Flow = 25.0 c.f.s.
Maximum Depth of Flow Desired
At Low Point (ye) = 0.5'
Gutter Flow

Find:

Length of Inlet Required (Li)

Solution:

Enter Graph at 25.0 c.f.s.
Intersect ye = 0.5'
Read Li = 10.4'
Use 12' inlet

| ROUGHNESS COEFFICIENT n = 0.0175 | |
|---|---|
| STREET WIDTH | CROWN TYPE |
| ALL | Straight and Parabolic |

| | | |
|---|---|---|
| City of Highland Village | RECESSED AND STANDARD CURB OPENING INLET CAPACITY CURVES AT LOW POINT | FIGURE 4-2 |

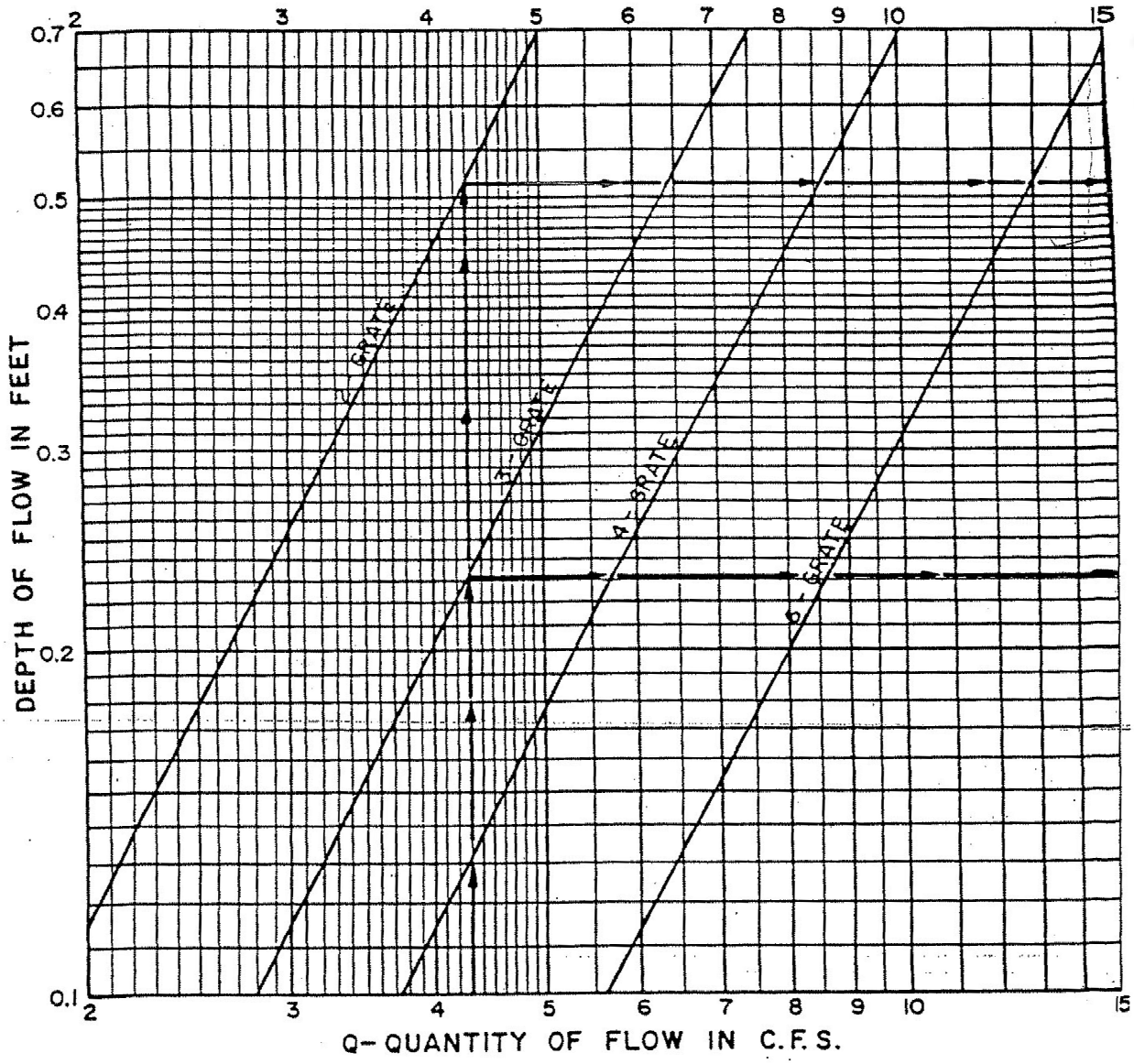


EXAMPLE

Known:

Quantity of Flow = 4.3 c.f.s.
Maximum Depth of Flow Desired at Low Point = 0.3'

Find:

Inlet Required

Solution:

Enter Graph at 4.3 cfs
Intersect 3–Grate at 0.23'
Intersect 2–Grate at 0.51'
Use 3–Grate

| | | |
|---|---|---|
| City of Highland Village | GRATE INLET<br>CAPACITY CURVES<br>AT LOW POINT | FIGURE 4-3 |

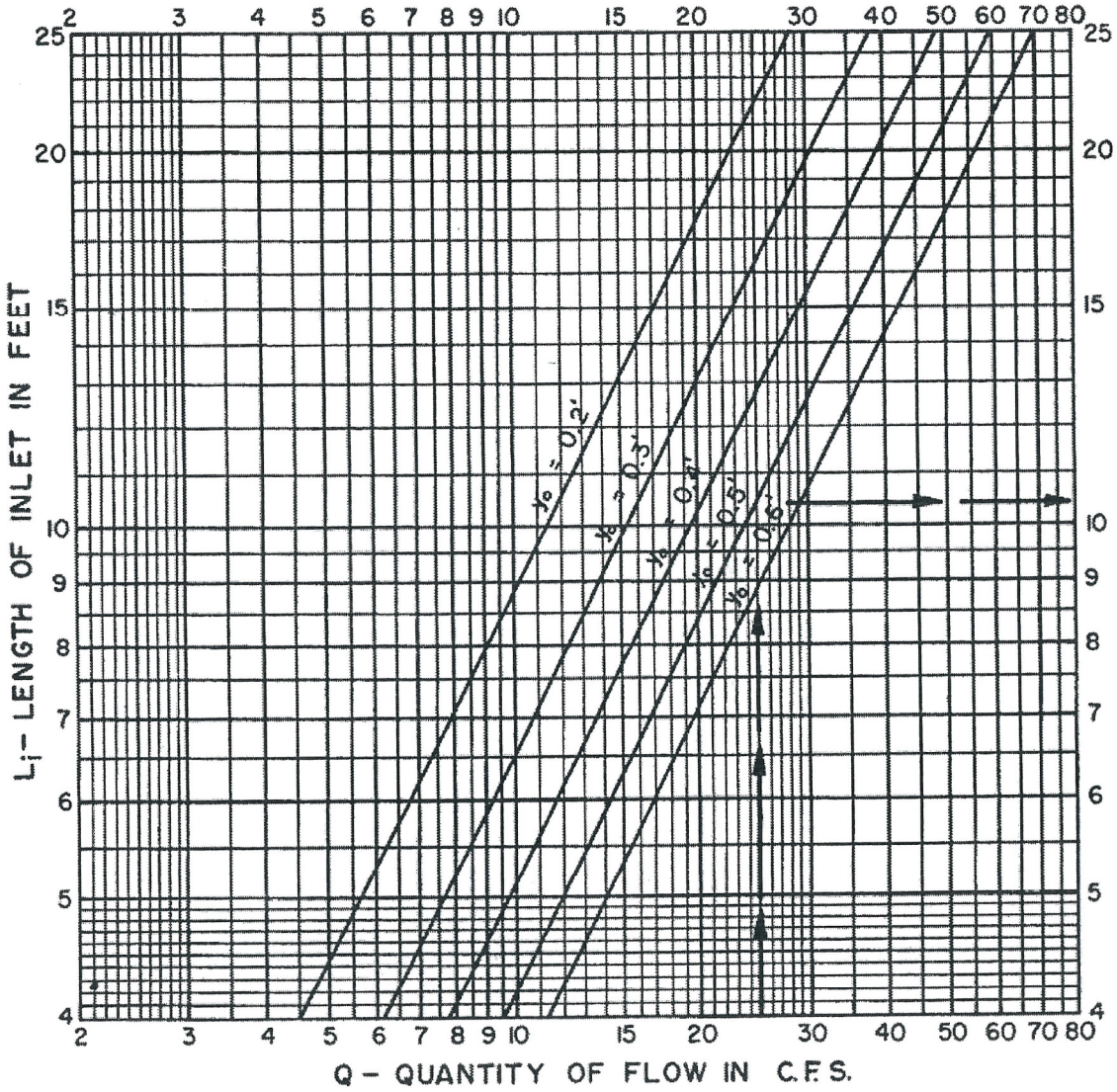


EXAMPLE

Known:

Quantity of Flow = 25.0 c.f.s.
Maximum Depth of Flow Desired
At Low Point (ye) = 0.5'
Gutter Flow

Find:

Length of Inlet Required (Li)

Solution:

Enter Graph at 25.0 cfs
Intersect ye = 0.5'
Read Li = 10.4'
Use 12' inlet

| ROUGHNESS COEFFICIENT n = 0.0175 | |
|---|---|
| STREET WIDTH | CROWN TYPE |
| ALL | Straight and Parabolic |

City of Highland Village

COMBINATION INLET
CAPACITY CURVES
AT LOW POINT

FIGURE 4-4

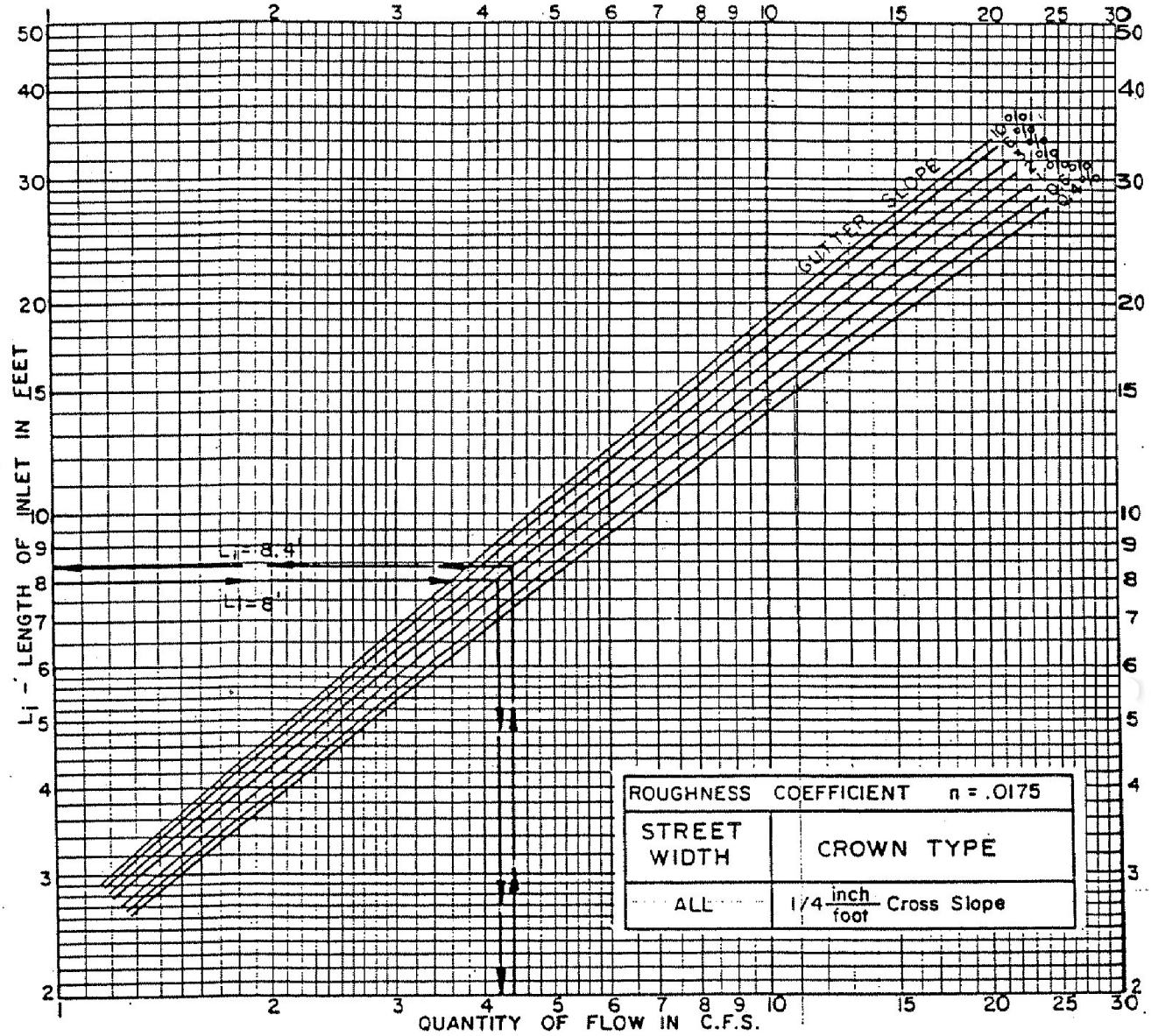


EXAMPLE

Known:

Pavement Width = 24'
Gutter Slope = 2%
Pavement Cross Slope 1/4"/1'
Gutter Flow = 4.4 c.f.s.

Find:

Length of Inlet Required (Li)

Solution:

Enter Graph at 4.4 c.f.s.
Intersect Slope = 2.0%
Read Li = 8.4'

Decision:

1. Use 10' Inlet
   No Flow Remains in Gutter
2. Use 8' Inlet
   Intercept Only Part of Flow

Use 8' Inlet
Enter Graph at Li = 8'
Intersect Slope = 2%
Read Q = 4.2 c.f.s.
Remains Gutter Flow =
4.4 c.f.s. − 4.2 c.f.s. = 0.2 c.f.s.

| | | |
|---|---|---|
| City of Highland Village | RECESSED AND STANDARD CURB OPENING INLET CAPACITY CURVES ON GRADE 1/4 INCH FOOT CROSS SLOPE | FIGURE 4-5 |

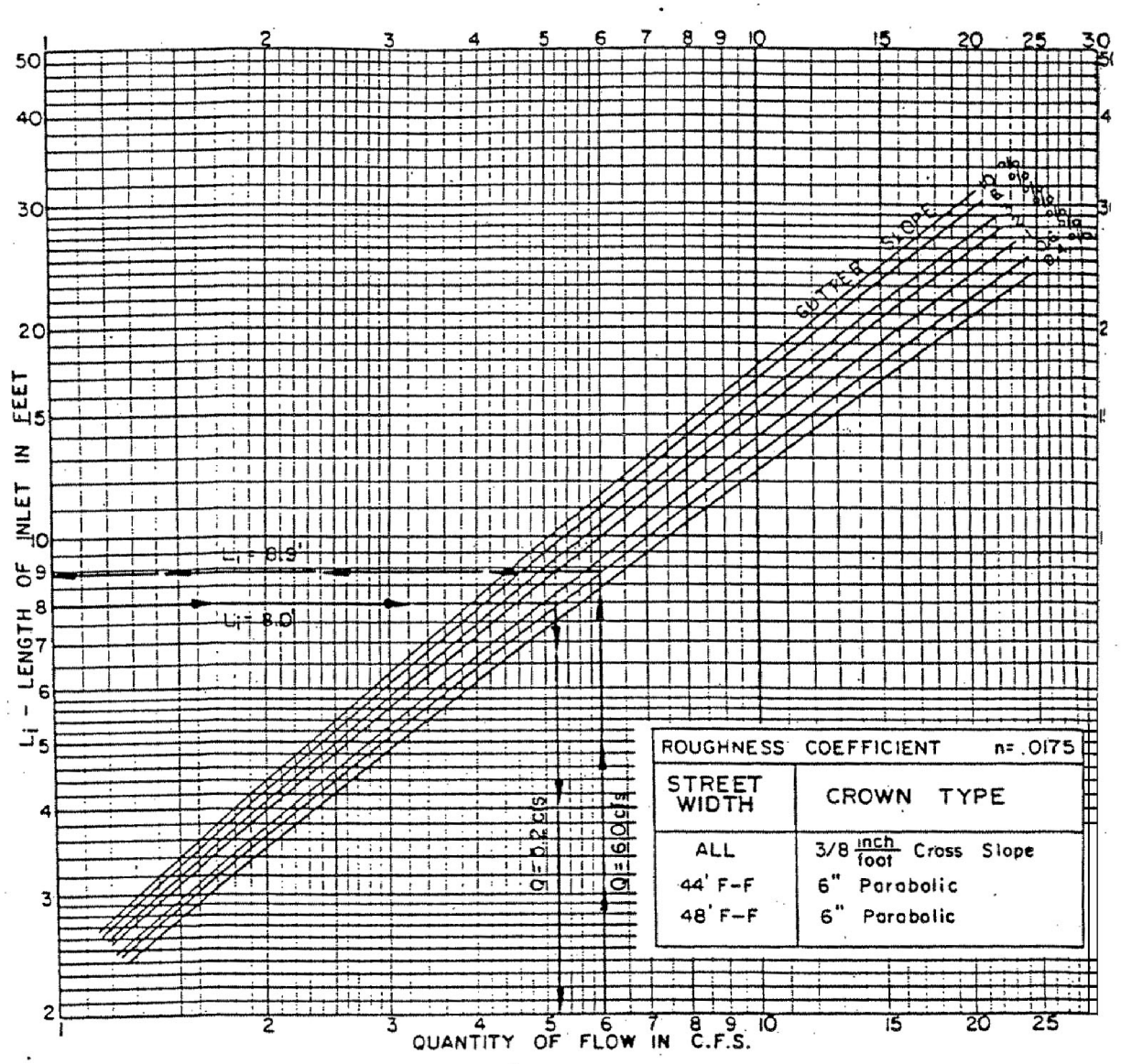


EXAMPLE

Known:

Pavement Width = 4.4'
Gutter Slope = 0.6%
6" Parabolic Crown
Gutter Flow = 6.0 c.f.s.

Find:

Length of Inlet Required (Li)

Solution:

Enter Graph at 6.0 c.f.s.
Intersect Slope = 0.6%
Read Li = 8.9'

Decision:

1. Use 10' Inlet
   No Flow Remains in Gutter
2. Use 8' Inlet
   Intercept Only Part of Flow

Use 8' Inlet
Enter Graph at Li = 8'
Intersect Slope = 0.6%
Read Q = 5.2 c.f.s.
Remains Gutter Flow =
6.0 c.f.s. − 5.2 c.f.s. = 0.8 c.f.s.

City of Highland Village

RECESSED AND STANDARD
CURB OPENING INLET
CAPACITY CURVES
ON GRADE

FIGURE 4-6

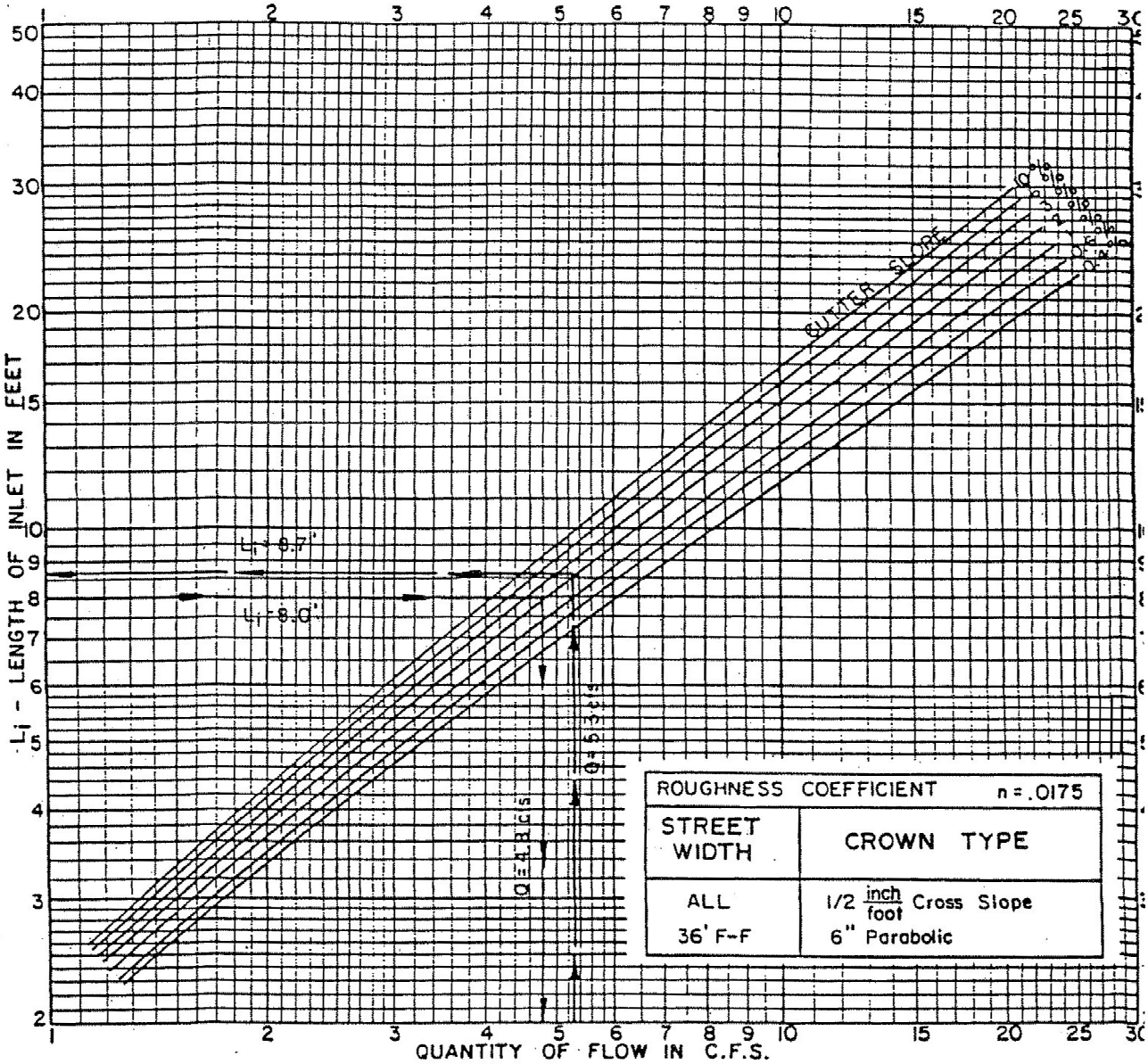


EXAMPLE

Known:

Pavement Width = 36'
Gutter Slope = 2%
6" Parabolic Crown
Gutter Flow = 5.3 c.f.s.

Find:

Length of Inlet Required (Li)

Solution:

Enter Graph at 5.3 c.f.s.
Intersect Slope = 2%
Read Li = 8.7'

Decision:

1. Use 10' Inlet
   No Flow Remains in Gutter
2. Use 8' Inlet
   Intercept Only Part of Flow

Use 8' Inlet
Enter Graph at Li = 8'
Intersect Slope = 2%
Read Q = 4.8 c.f.s.
Remains Gutter Flow =
5.3 c.f.s. − 4.8 c.f.s. = 0.5 c.f.s.

City of Highland Village

RECESSED AND STANDARD CURB OPENING INLET CAPACITY CURVES ON GRADE 1/2 INCH FOOT CROSS SLOPE AND 6 INCH PARABOLIC

FIGURE 4-7

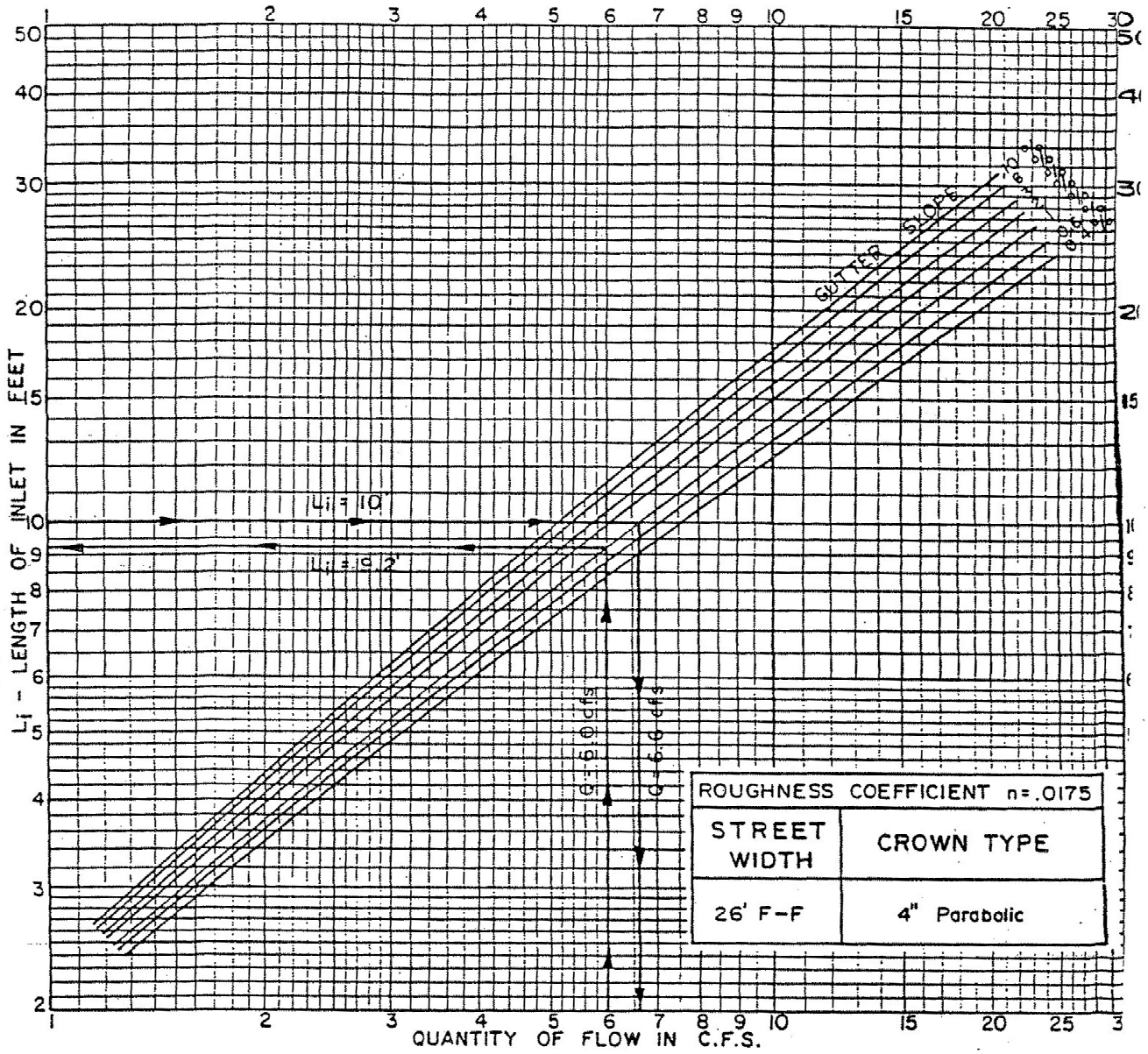


EXAMPLE

Known:

Pavement Width = 26'
Gutter Slope = 1%
Pavement Cross Slope
Gutter Flow = 6.0 c.f.s.

Find:

Length of Inlet Required (Li)

Solution:

Enter Graph at 6.0 c.f.s.
Intersect Slope = 1%
Read Li = 9,2'

Decision:

1. Use 10' Inlet
   No Flow Remains in Gutter
2. Use 8' Inlet
   Intercept Only Part of Flow

Use 10' Inlet
Enter Graph at Li = 10'
Intersect Slope = 1%
Read Q = 6.6 c.f.s.
No Flow Remains in Gutter

City of Highland Village

RECESSED AND STANDARD
CURB OPENING INLET
CAPACITY CURVES ON
GRADE 4 INCH PARABOLIC

FIGURE 4-8

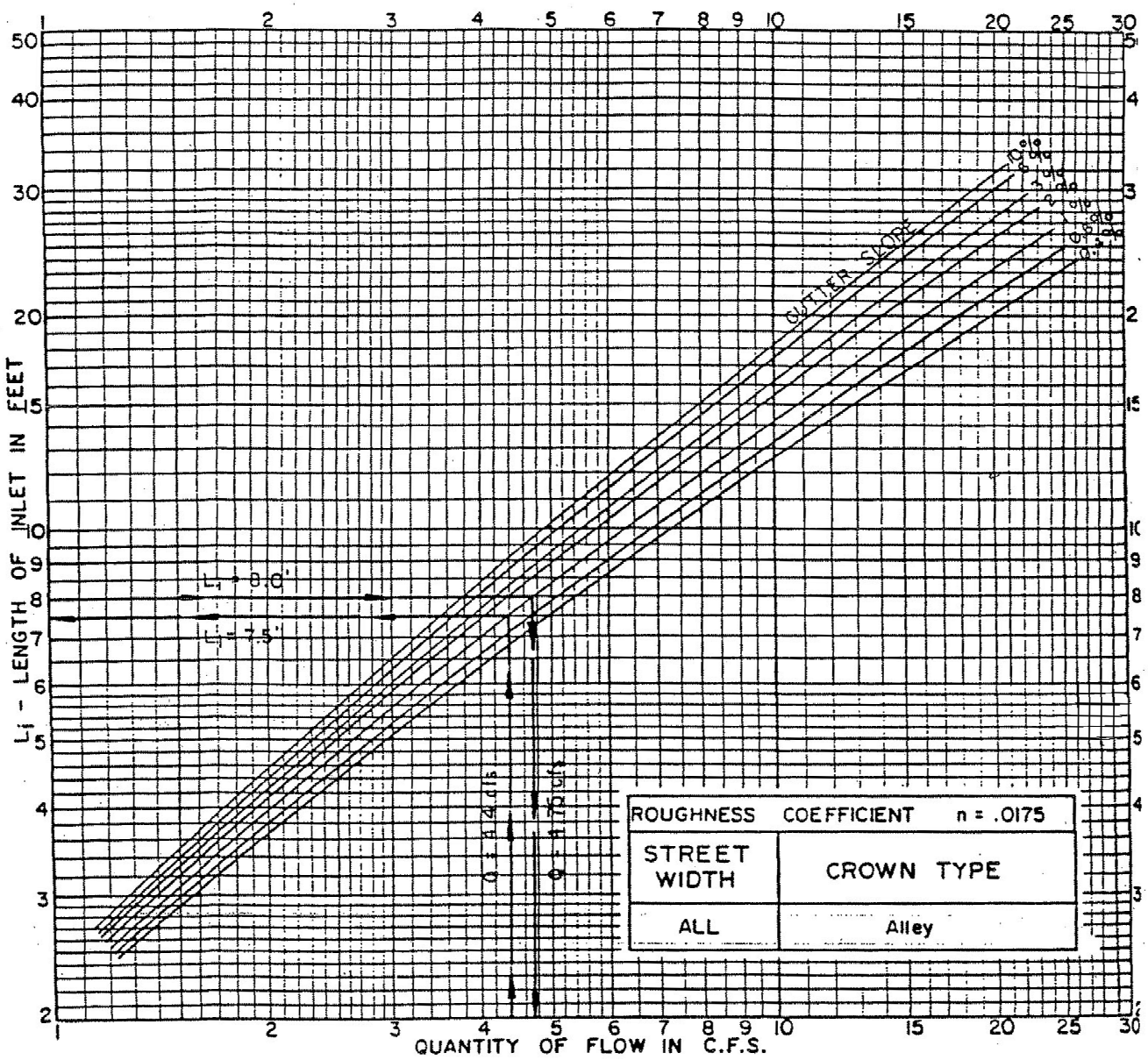


EXAMPLE

Known:

Pavement Width = 16'
Gutter Slope = 1%
Pavement Cross Slope = 1/4"/1'
Gutter Flow = 4.4 c.f.s.

Find:

Length of Inlet Required (Li)

Solution:

Enter Graph at 4.4 c.f.s.
Intersect Slope = 1%
Read Li = 7.5'

Decision:

1. Use 8' Inlet
   No Flow Remains in Gutter
2. Use 6' Inlet
   Intercept Only Part of Flow

Use 8' Inlet
Enter Graph at Li = 8'
Intersect Slope = 1%
Read Q = 4.75 c.f.s.
No Flow Remains in Gutter

| | | |
|---|---|---|
| City of Highland Village | RECESSED AND STANDARD CURB OPENING INLET CAPACITY CURVES ON GRADE FOR ALLEY WAYS | FIGURE 4-9 |

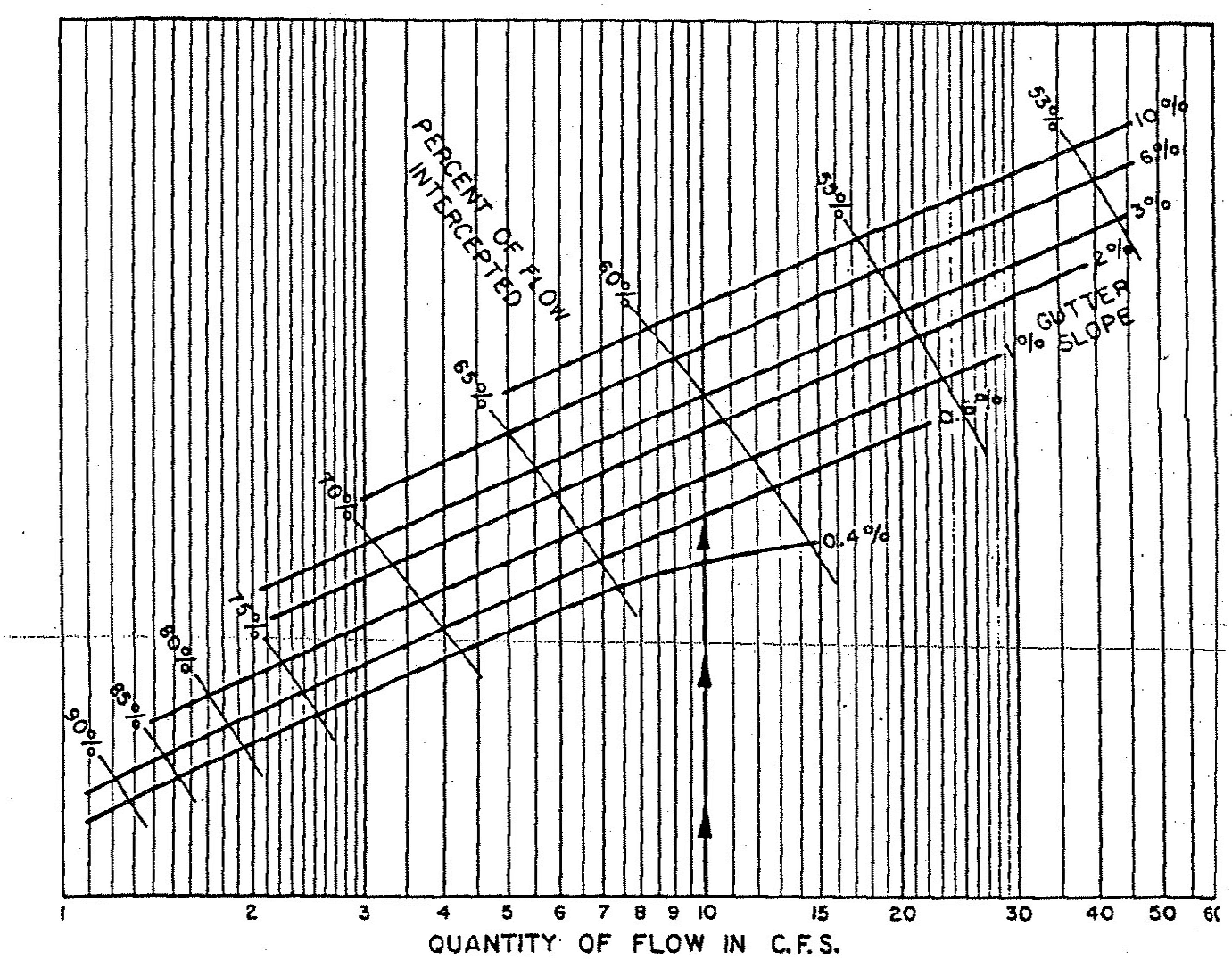


EXAMPLE

Known:

Quantity of Flow = 10.0 c.f.s.
Gutter Slope = 0.6%

Find:

Capacity of Two Grate Combination Inlet

Solution:

Enter Graph at 10.0 cfs
Intersect Slope = 0.6%
Read Percent of Flow Intercepted = 62%
62% of 10.0 c.f.s. = 6.2 c.f.s. as Capacity of Three Grate Inlet
Remaining Gutter Flow = 10.0 c.f.s. − 6.2 c.f.s. = 3.8 c.f.s.

| | | |
|---|---|---|
| City of Highland Village | TWO GRATE COMBINATION INLET<br>CAPACITY CURVES<br>ON GRADE | FIGURE 4-10 |

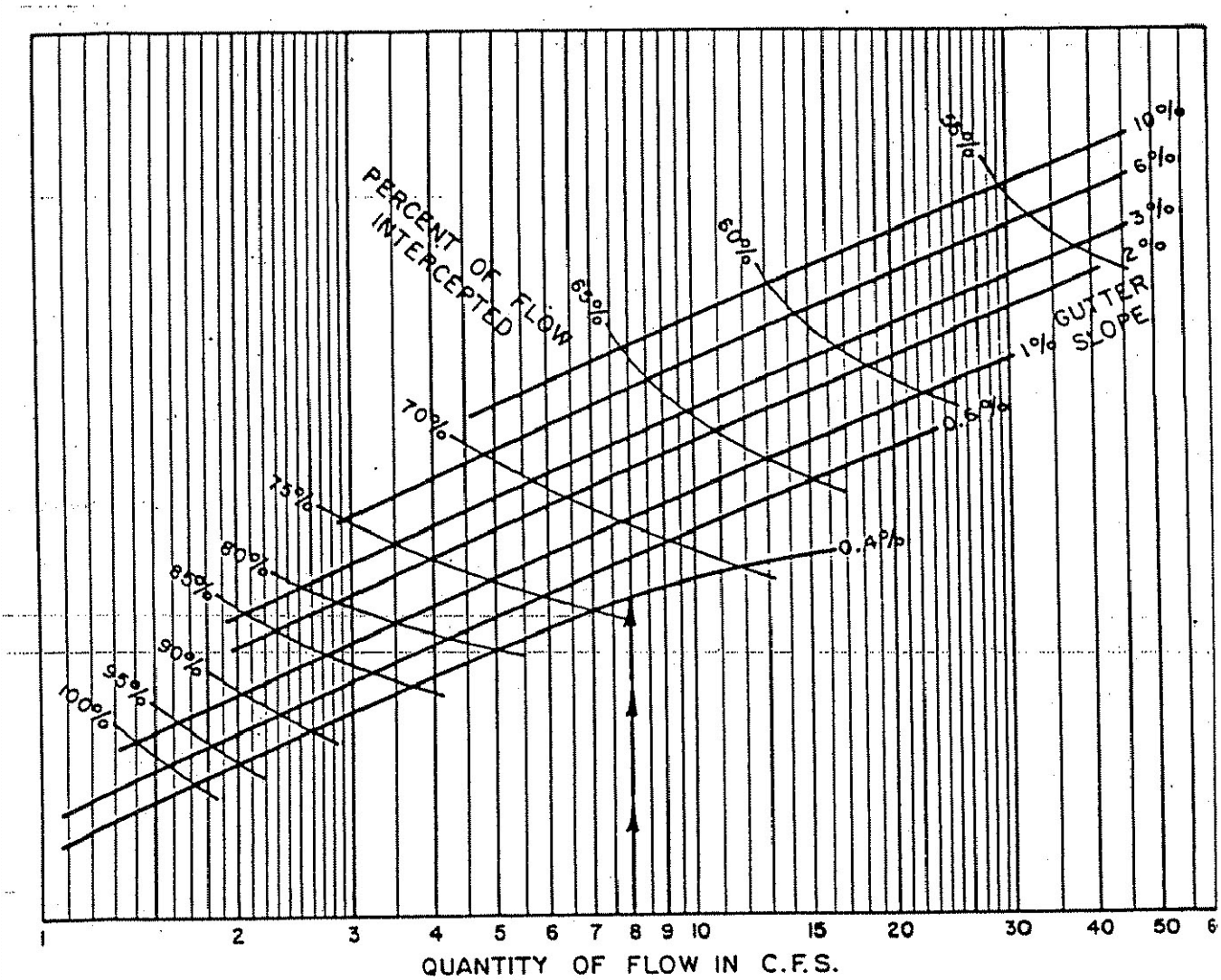


EXAMPLE

Known:

Quantity of Flow = 8.0 c.f.s.
Gutter Slope = 0.4%

Find:

Capacity of Two Grate Inlet

Solution:

Enter Graph at 8.0 cfs
Intersect Slope = 0.4%
Read Percent of Flow
Intercepted = 74%
74% of 8.0 c.f.s. = 5.9 c.f.s.
as Capacity of Three Grate Inlet
Remaining Gutter Flow =
8.0 c.f.s. − 5.9 c.f.s. = 2.1 c.f.s.

| | | |
|---|---|---|
| City of Highland Village | THREE GRATE INLET AND<br>THREE GRATE COMBINATION INLET<br>CAPACITY CURVES<br>ON GRADE | FIGURE 4-11 |

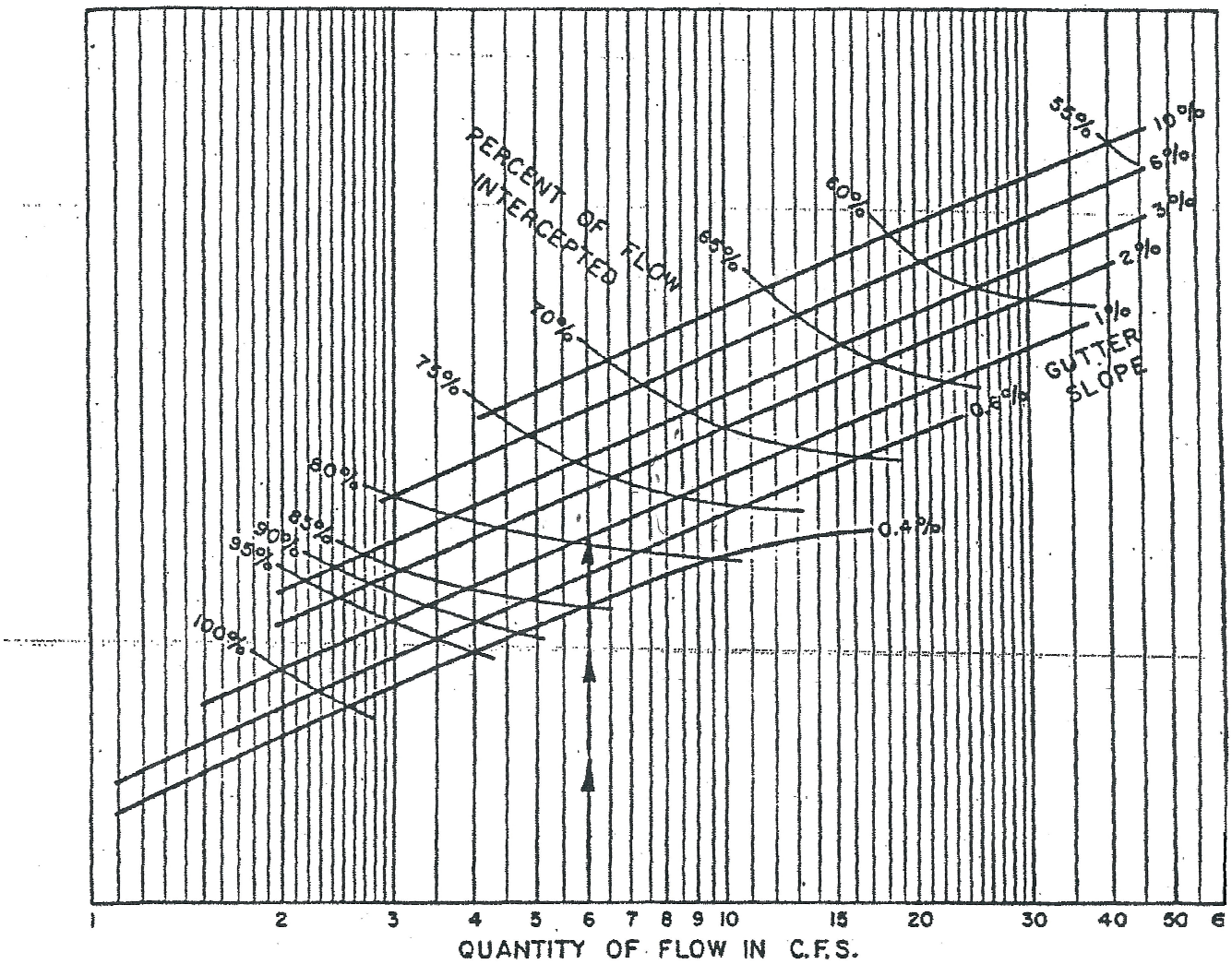


EXAMPLE

Known:

Quantity of Flow = 6.0 c.f.s.
Gutter Slope = 1.0%

Find:

Capacity of Four Grate Combination Inlet

Solution:

Enter Graph at 6.0 cfs
Intersect Slope = 1.0%
Read Percent of Flow Intercepted = 79%
79% of 6.0 c.f.s. = 4.7 c.f.s. as Capacity of Three Grate Inlet
Remaining Gutter Flow = 6.0 c.f.s. − 4.7 c.f.s. = 1.3 c.f.s.

| | | |
|---|---|---|
| City of Highland Village | FOUR GRATE COMBINATION INLET<br>CAPACITY CURVES<br>ON GRADE | FIGURE 4-12 |

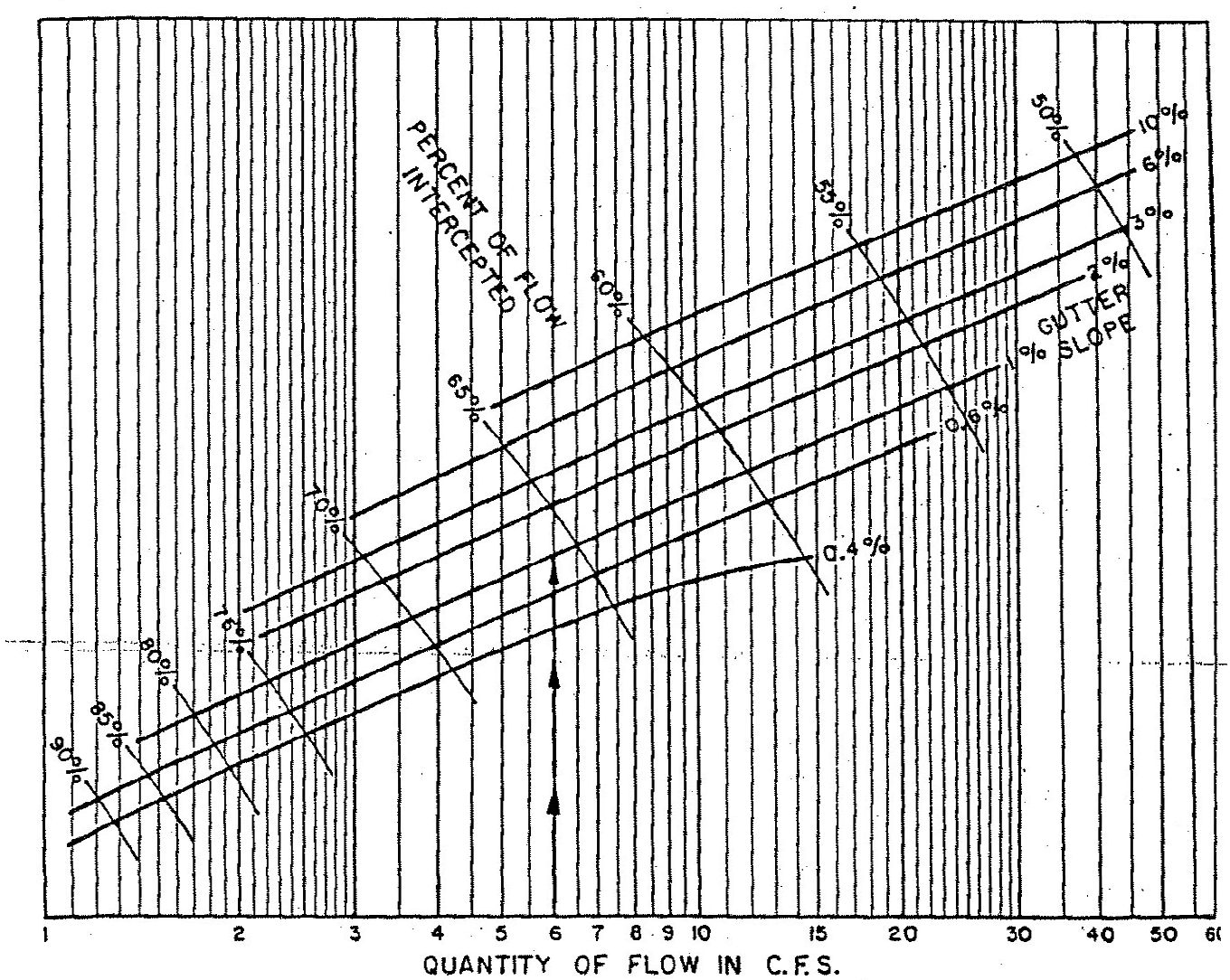


EXAMPLE

Known:

Quantity of Flow = 6.0 c.f.s.
Gutter Slope = 1.0%

Find:

Capacity of Two Grate Inlet

Solution:

Enter Graph at 6.0 cfs
Intersect Slope = 1.0%
Read Percent of Flow
Intercepted = 66%
66% of 6.0 c.f.s. = 4.6 c.f.s.
as capacity of Two Grate Inlet
Remaining Gutter Flow =
6.0 c.f.s. − 4.0 c.f.s. = 2.0 c.f.s.

City of Highland Village

TWO GRATE INLET
CAPACITY CURVES
ON GRADE

FIGURE 4-13

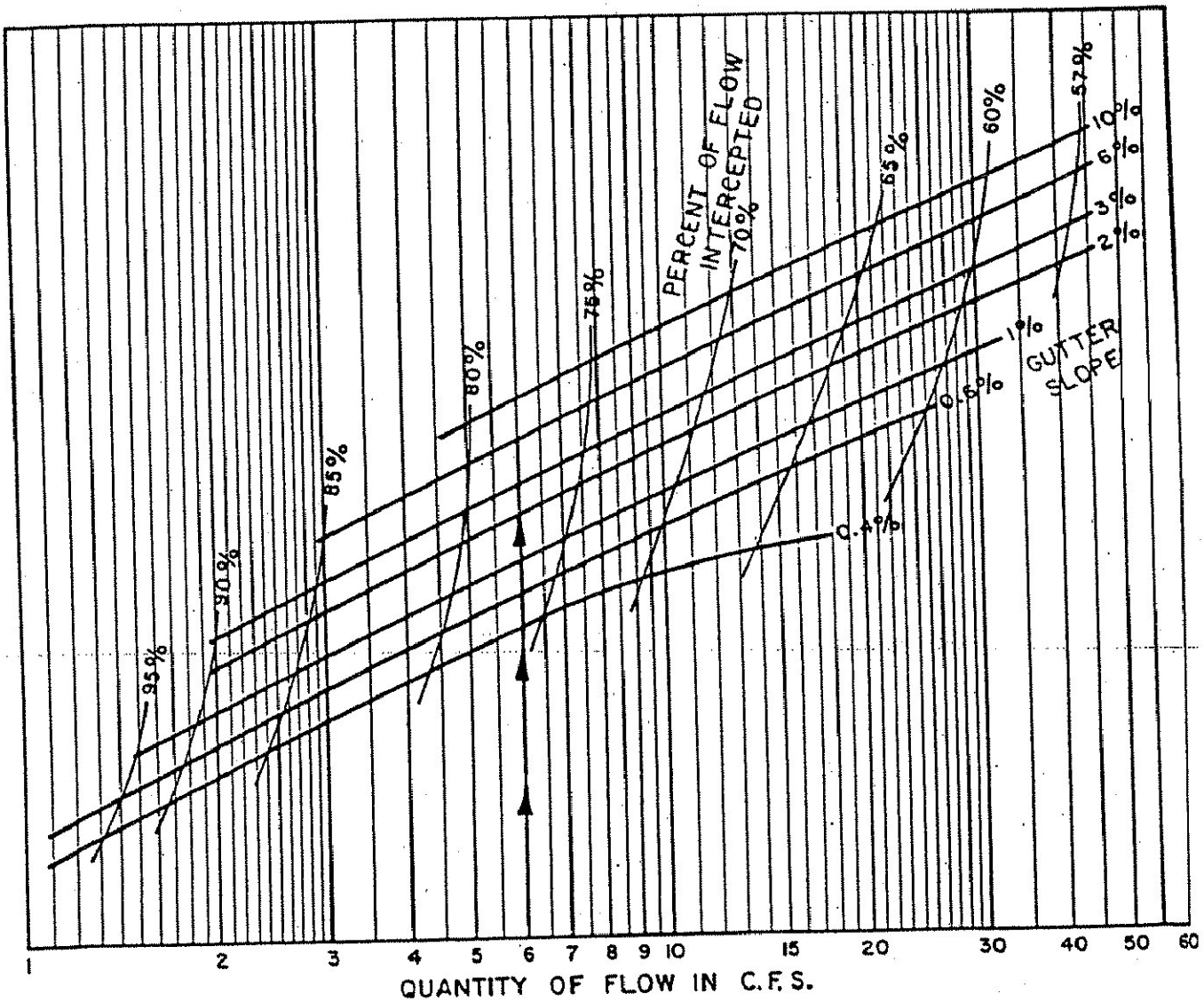


EXAMPLE

Known:

Quantity of Flow = 6.0 c.f.s.
Gutter Slope = 1.0%

Find:

Capacity of Four Grate Inlet

Solution:

Enter Graph at 6.0 cfs
Intersect Slope = 1.0%
Read Percent of Flow
Intercepted = 77%
77% of 6.0 c.f.s. = 4.6 c.f.s.
as capacity of Four Grate Inlet
Remaining Gutter Flow =
6.0 c.f.s. − 4.6 c.f.s. = 1.4 c.f.s.

City of Highland Village

FOUR GRATE INLET
CAPACITY CURVES
ON GRADE

FIGURE 4-14

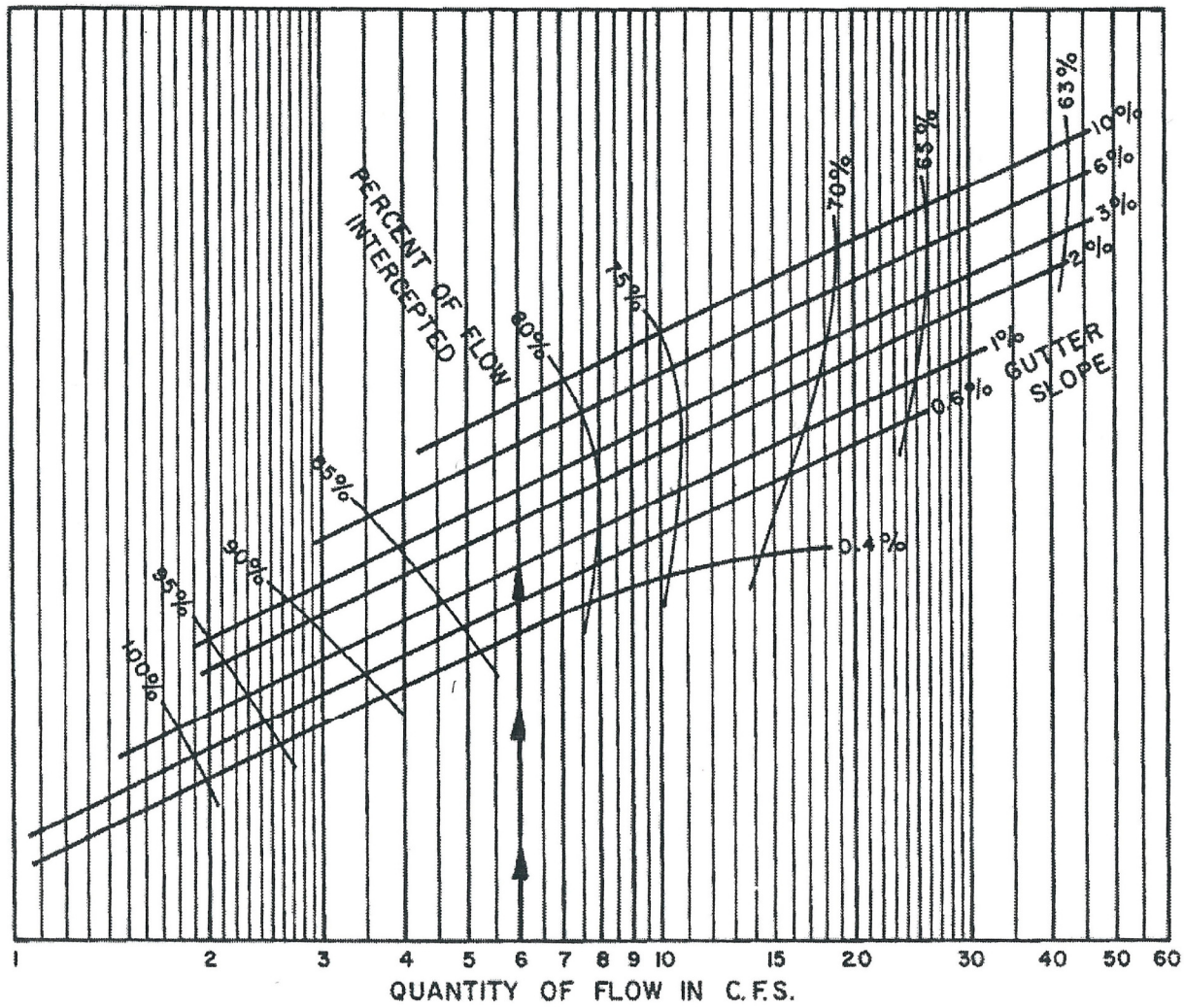


EXAMPLE

Known:

Quantity of Flow = 6.0 c.f.s.
Gutter Slope = 1.0%

Find:

Capacity of Six Grate Inlet

Solution:

Enter Graph at 6.0 cfs
Intersect Slope = 1.0%
Read Percent of Flow
Intercepted = 82%
82% of 6.0 c.f.s. = 4.9 c.f.s.
as Capacity of Three Grate Inlet
Remaining Gutter Flow =
6.0 c.f.s. − 4.9 c.f.s. = 1.1 c.f.s.

City of Highland Village

SIX GRATE INLET
CAPACITY CURVES
ON GRADE

FIGURE 4-15

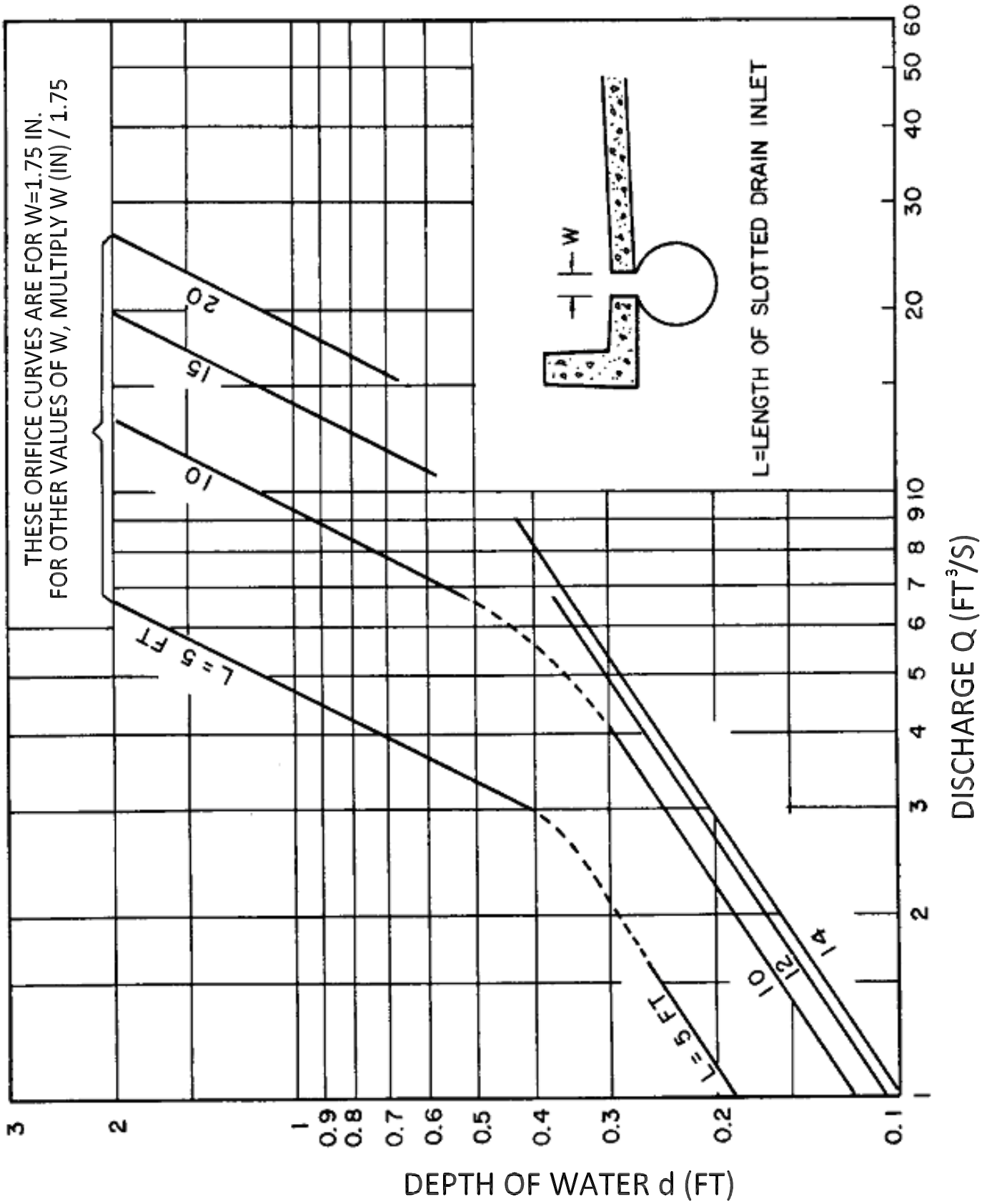


CAPACITY OF
SLOTTED DRAIN INLETS

FIGURE 4-16

# 5.0 FLOW IN STORM DRAINS AND THEIR APPURTENANCES

## 5.1 GENERAL

A general description of storm drainage systems and quantities of storm runoff is contained in Section 2.0 of this manual. It is the purpose of this section to consider the significance of the hydraulic elements of storm drains and their appurtenances to a storm drainage system.

Hydraulically, storm drainage systems are conduits in which unsteady and non-uniform free flow exists. Accordingly, storm drains are designed for open-channel flow to satisfy, as well as possible, the requirements for unsteady and non-uniform flow. Steady flow conditions may or may not be uniform.

Approval must be granted by the Director of Public Works/City Engineer for use of any storm sewer pipe other than reinforced concrete pipe (RCP) in storm sewer systems to be maintained by the City of Highland Village.

## 5.2 VELOCITIES AND GRADES

### 5.2.1 Minimum Grades

Storm drains should operate with velocities of flow sufficient to prevent excessive deposition of solid materials; otherwise, objectionable clogging may result. The controlling velocity is near the bottom of the conduit and considerably less than the mean velocity. Storm drains shall be designed to have a minimum mean velocity of 3 fps, flowing full, which is considered to be the lower limit of scouring velocity. The minimum pipe slope used for standard construction procedures shall be 0.5%, unless otherwise approved by the City Engineer.

At inlet locations, if the potential water surface elevation is higher than 1 foot below ground elevation, adjustments are needed in the system to reduce the elevation of the hydraulic grade line.

### 5.2.2 Maximum Velocities

Maximum velocities in conduits are important due to the possibility of excessive erosion on the storm drain inverts and undesirable outlet conditions. Table 5-1 shows the limits of maximum velocity for storm drains.

**Table 5-1**
MAXIMUM DESIRABLE VELOCITY IN STORM DRAINS

| **Description** | **Maximum Desirable Velocity** |
|---|---|
| Culverts (All types) | 15 fps |
| Storm Drains (Inlet laterals) | No Limit |
| Storm Drains (Collectors) | 15 fps |
| Storm Drains (Mains) | 12 fps |

Source: iSWM Criteria Manual

### 5.2.3 Minimum Diameter

Pipes which are to become an integral part of the public storm sewer system shall have a minimum diameter of 18 inches unless otherwise approved by the Director of Public Works/City Engineer.

## 5.3 MATERIALS

Roughness coefficients are directly related to construction procedures. In selecting a roughness coefficient for concrete pipe, between 0.011 and 0.015, consideration shall be given to the average conditions during the useful life of the structure. An “n” value of 0.017 for concrete pipe shall be used primarily in analyzing old conduits where alignment is poor and joints have become rough. If, for example, concrete pipe is being designed at a location where there is reason to believe that the roughness would increase through erosion or corrosion of the interior surface, slight displacement of joints or entrance of foreign materials, a roughness coefficient will be selected which in the judgment of the designer, will represent the average condition. Any selection of “n” values below the minimum or above the maximum, for monolithic concrete structures, concrete pipe or corrugated metal pipe, must have the approval of the Director of Public Works/City Engineer.

The coefficients of roughness listed in Table 5-2 are for use in the nomographs contained herein, or for direct solution of Manning's Equation.

**Table 5-2**
ROUGHNESS COEFFICIENTS ("n") FOR STORM DRAINS

| Materials of Construction | Manning's n* |
|---|---|
| Concrete Pipe | 0.011-0.015 |
| Corrugated Metal Pipe | |
| Plain or Coated | 0.022-0.026 |
| Paved Invert | 0.018-0.022 |
| Polyethylene (Plastic) | |
| Smooth | 0.009-0.015 |
| Corrugated | 0.018-0.025 |
| Polyvinyl Chloride (PVC) | 0.009-0.015 |

*Lower values are usually for well-constructed and maintained (smoother) pipes
Source: HEC 22

## 5.4 FULL OR PART FULL FLOW IN STORM DRAINS

### 5.4.1 General

All storm drains shall be designed by the application of the Continuity Equation and Manning's Equation either through the appropriate charts or normographs or by direct solutions of the equations as follows:

$$Q = AV$$

$$Q = \frac{1.486\, A\, R^{2/3}\, (S_f)^{1/2}}{n}$$

$$v = \frac{1.486\, R^{2/3}\, (S_f)^{1/2}}{n}$$

| | | | |
|---|---|---|---|
| where: | Q | = | pipe flow (cfs) |
| | A | = | cross-sectional area of pipe ($ft^2$) |
| | V | = | velocity of flow (fps) |
| | N | = | coefficient of roughness of pipe from Table 5-2 |
| | R | = | hydraulic radius (ft) |
| | | = | $A/W_p$ |
| | $S_f$ | = | friction slope in pipe (ft/ft) |
| | $W_p$ | = | wetted perimeter (ft) |
| | V | = | velocity of flow in conduit (fps) |

There are several general rules to be observed when designing storm sewer systems. When followed, they will tend to alleviate or eliminate the common mistakes made in storm sewer design. These rules are as follows:

1. Select a pipe size and slope so that the velocity of flow will increase progressively, or at least will not appreciably decrease at inlets, bends or other changes in geometry or configuration.

2. Do not discharge the contents of a larger pipe into a smaller one, even though the capacity of the smaller pipe may be greater due to a steeper slope.

3. At changes in pipe size, match the soffits of the two pipes at the same level rather than matching the flow lines.

4. Conduits are to be checked at the time of their design with reference to critical slope. If the slope of the line is greater than critical slope, the unit will likely be operating under entrance control instead of the originally assumed normal flow. Conduit slope should be kept below critical slope if at all possible. This also removes the possibility of a hydraulic jump within the line.

5. Where laterals tie to trunk lines, the laterals will be made at a 60° angle with the trunk line and the connection will be where the longitudinal centers intersect.

### 5.4.2 Pipe Flow Charts

Figure 5-1 can be used for determining flow properties in circular pipe. The graphs are based upon a value of "n" of 0.013.

For values of "n" other than 0.013, the value of Q should be modified by using the formula below:

$$Q_e = \frac{Q_n\,(0.013)}{n_e}$$

| | | | |
|---|---|---|---|
| where: | $Q_e$ | = | flow based upon $n_e$ (cfs) |
| | $n_e$ | = | value of "n" other than 0.013 |
| | $Q_n$ | = | flow from the nomograph based on n = 0.013 (cfs) |

This formula is used in two ways. If $n_e$ = 0.015 and $Q_e$ is unknown, use the known properties to find $Q_n$ (based on n = 0.013) first, and then use $Q_n$ and the other known properties to find the unknown value on the nomograph.

## 5.5 HYDRAULIC GRADIENT AND PROFILE OF STORM DRAINS

In storm drain systems flowing full, all losses of energy through resistance to flow in pipes, by changes of momentum or by interference with flow patterns at junctions, must be accounted for by accumulating head losses along the system from its initial upstream inlet to its outlet. The purpose of the determination of head losses at junctions is to include these values in a progressive calculation of the hydraulic gradient along the storm drain system. In this way, it is possible to determine the water surface elevation which will exist at each structure.

Following the commutation of the quantity of storm runoff entering each inlet, the size and gradient of the pipe required to carry the runoff must determined. The following criteria provide the starting elevation of the hydraulic gradient at the outfall of the system:

1. The 5-year, 10-year, 25-year, 50-year and 100-year storm water surface elevations in a creek, stream or other open channel is to be calculated for the time of peak pipe discharge in the design storm.

2. For pipes that flow into sumps, ponds or other retention facilities, the hydraulic gradient should start at the flood elevation for the 100-year storm.

3. When a proposed storm sewer is to be connected to an existing storm sewer system that has a flow greater than the proposed, the hydraulic gradient for the proposed storm sewer should start at the elevation of the existing storm sewer's hydraulic gradient.

4. No connection to an existing storm sewer shall be allowed where the existing system has insufficient capacity to carry the additional flow from the proposed storm sewer.

The friction head loss along the pipe shall be determined by direct application of Manning's Equation or by the nomographs (Figure 5-2) in this section. The friction head loss over a given length of pipe may be calculated directly from the following equations:

$$h_f = S_f L$$

$$S_f = \left[\frac{Q\,n}{1.486\,A\,R^{2/3}}\right]^2$$

where $h_f$ = Friction head loss;
$S_f$ = friction slope;
$L$ = length of the pipe;
$Q$ = design flow in the pipe.

Minor losses due to turbulence at structures shall be determined by the procedure outlined in Section 5.8. The hydraulic grade line shall in no case be closer to the surface of the ground or gutter of the street than 1.5 feet unless otherwise approved by the Director of Public Works/City Engineer. If the storm sewer system is to be extended at some future date, present and future operation of the system must be considered.

## 5.6 MANHOLE LOCATION

Manholes shall preferably be located at street intersections, conduit junctions, changes of grade or changes of alignment and in accordance to HEC 22, 2001. Table 5-3 shows the maximum spacing of a manhole based on the pipe size.

**Table 5-3**
ACCESS MANHOLE SPACING

| Pipe Size (in) | Maximum Spacing (feet) |
|---|---|
| 12 to 24 | 300 |
| 27 to 36 | 400 |
| 42 to 54 | 500 |
| 60 and up | 1000 |

Source: Hec 22

## 5.7 PIPE CONNECTIONS

Pipe connections shall be made using prefabricated wye connections when possible. Pipe connections larger than 24 inches will be made by field connections. This recommendation is based primarily on the fact that field connections are more easily fitted to a given alignment than are precast connections. Regardless of the amount of care exercised by the contractor in laying the pipe, gain in footage invariably throws precast connections slightly out of alignment. This error increases in magnitude as the size of the pipe increases.

## 5.8 MINOR HEAD LOSSES AT STRUCTURES

The following total energy head losses at structures shall be determined for inlets, manholes, wye branches or bends in the design of closed conduits. See Table 5-4 and Figures 5-3 and 5-4 for details of each case. The minimum head loss used at any structure shall be 0.10 foot, unless otherwise approved.

The basic equation for most cases, where both upstream and the downstream velocity are known, takes the form as set forth below:

$$h_j = K_j \frac{V_2^{\,2} - V_1^{\,2}}{2\,g}$$

where:

| | | |
|---|---|---|
| $h_j$ | = | junction or structure head loss (feet) |
| $V_1$ | = | velocity in upstream pipe (fps) |
| $V_2$ | = | velocity in downstream pipe (fps) |
| $K_j$ | = | junction or structure coefficient of loss. |

In the case where the initial velocity is negligible, the equation for head loss becomes:

$$h_j = K_j \frac{V_2^{\,2}}{2\,g}$$

At wye connections and field connections with a 60° angle of intersection, or at pipe size changes, the value of $K_j$ shall be as follows:

| | |
|---|---|
| Where $V_1 < V_2$ | Kj = 1.0 |
| Where $V_1 > V_2$ | Kj = 0.5 |

**Table 5-4**
JUNCTION OR STRUCTURE COEFFICIENT OF LOSS

| Case No. | Description of condition | Coefficient $K_j$ |
|---|---|---|
| 1 | Inlet on main line* | 0.5 |
| 2 | Inlet on main line with branch lateral* | 0.25 |
| 3 | Manhole on main line with 45° branch lateral | 0.5 |
| 4 | Manhole on main line with 90° branch lateral | 0.25 |
| 5 | 45° Wye Connection or cut-in | 0.75 |
| 6 | Conduit on curves for 90° | |
| | Curve radius = diameter | 0.5 |
| | Curve radius = (2 to 8) diameter | 0.4 |
| | Curve radius = (8 to 20) diameter | 0.25 |
| 7 | Bends where radius is equal to diameter | |
| | 90° Bend | 0.5 |
| | 60° Bend | 0.47 |
| | 45° Bend | 0.37 |
| | 22 1/2° Bend | 0.25 |
| 8 | Manhole on line with 60° lateral | 0.35 |
| | Manhole on line with 22-1/2° lateral | 0.75 |

* Must be approved by Director of Public Works/City Engineer

Source: HDS-5

## 5.9 UTILITIES

In the design of a storm drainage system, the engineer is frequently confronted with the problem of grade conflict between the proposed storm drain and existing utilities such as water, sanitary sewer, gas, telephone, electricity and cable television lines.

When conflicts arise between a proposed drainage system and a utility system, the owner of the utility system shall be contacted and made aware of the conflict. Any adjustments necessary to either the drainage system or the utility can then be determined. The design engineer is encouraged to contact the appropriate utility companies early in the design process. The design engineer shall strive to accommodate existing utilities without requiring their relocation whenever possible.

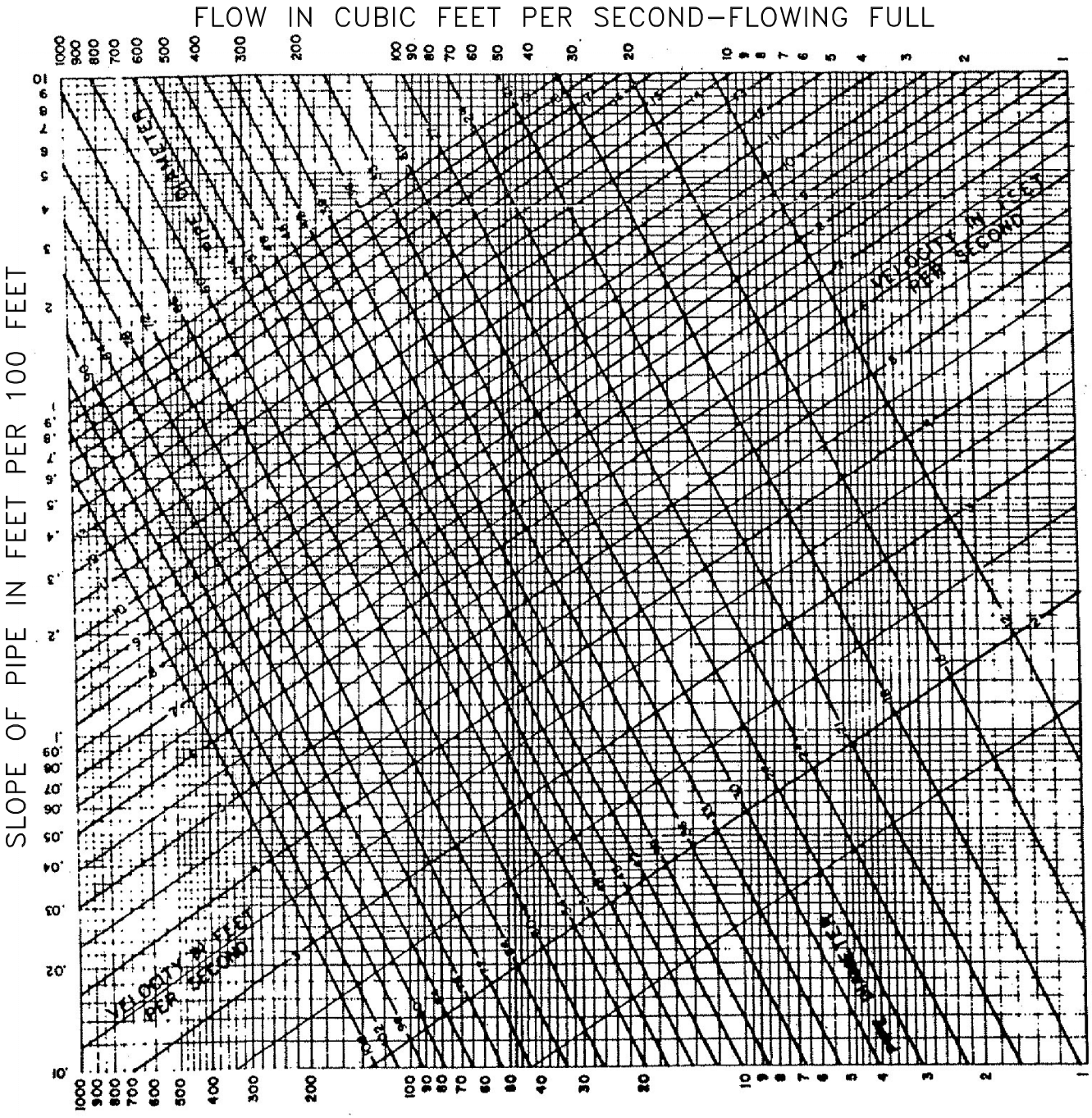


A GRAPHICAL SOLUTION
OF
MANNING'S EQUATION

$$V = \frac{1.486}{n} R^{2/3} S^{1/2}$$

$$n = 0.013$$

| | | |
|---|---|---|
| City of Highland Village | CAPACITY OF CIRCULAR PIPES FLOWING FULL | FIGURE 5-1 |

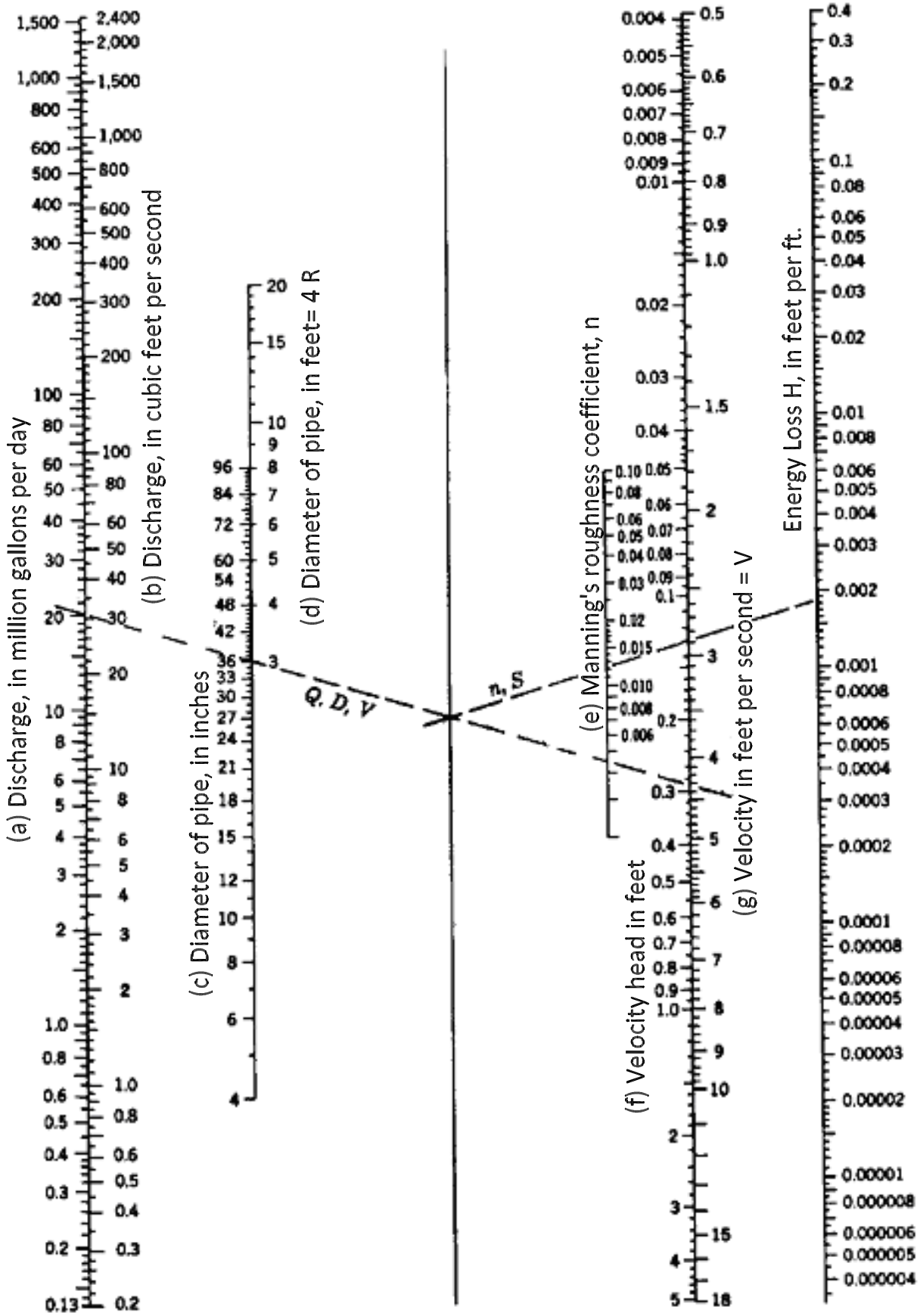


SOLUTION OF MANNING'S EQUATION FOR FLOW IN STORM DRAINS

FIGURE 5-2

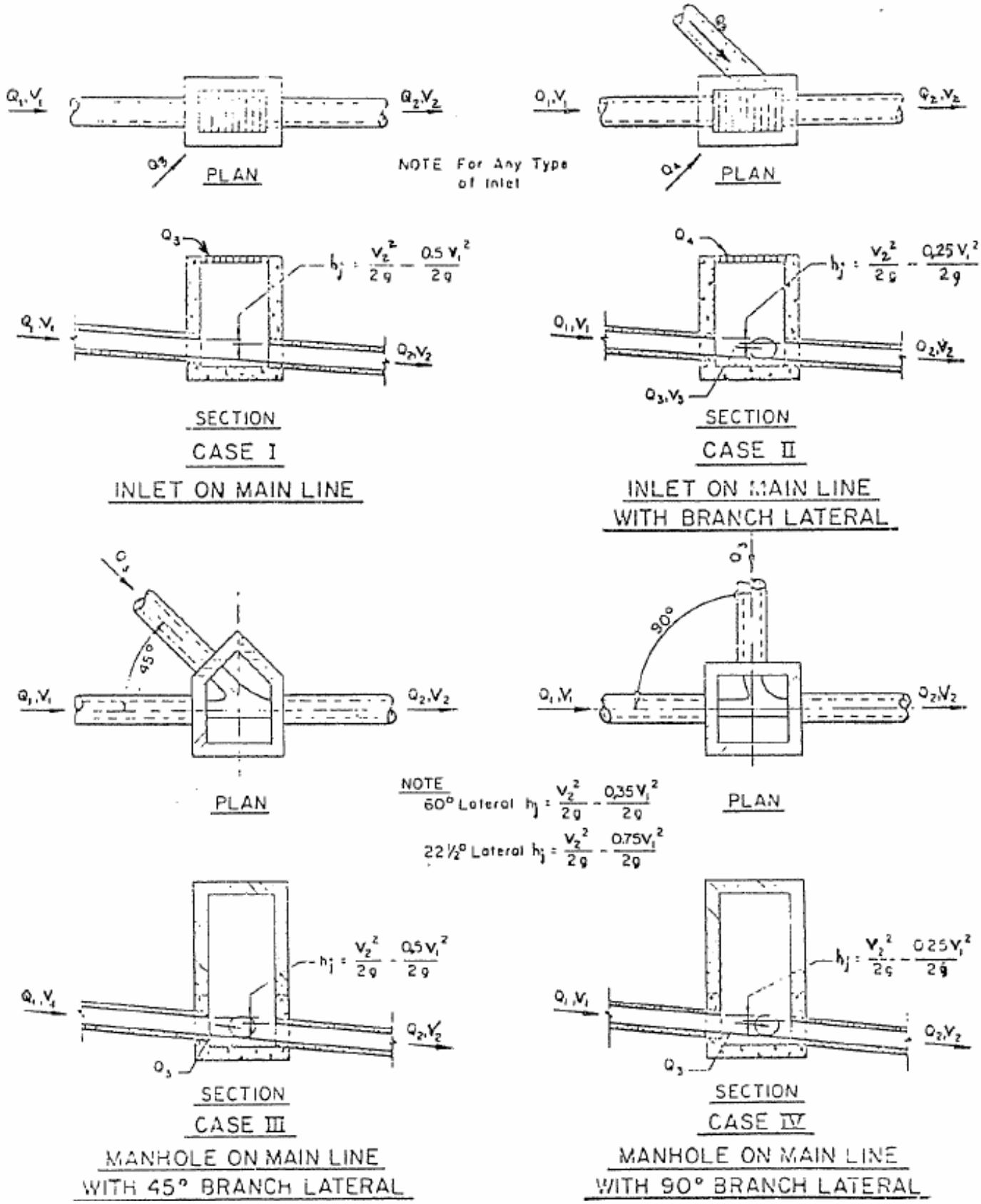


MINOR HEAD LOSSES DUE TO TURBULENCE AT STRUCTURES

FIGURE 5-3

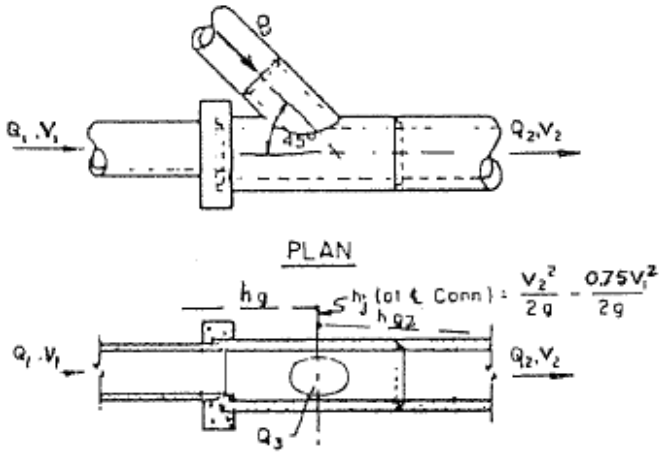


CASE V

45° WYE CONNECTION OR CUT IN

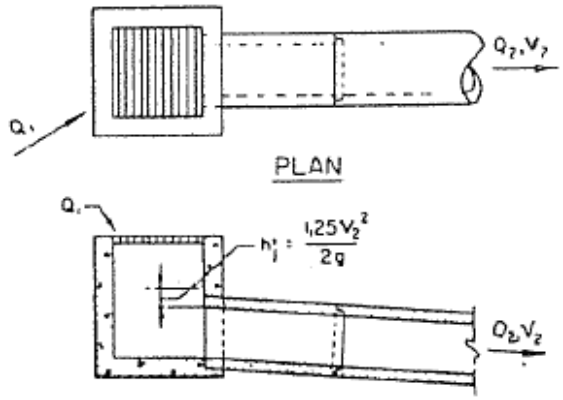


CASE VI

INLET OR MANHOLE AT BEGINNING OF LINE

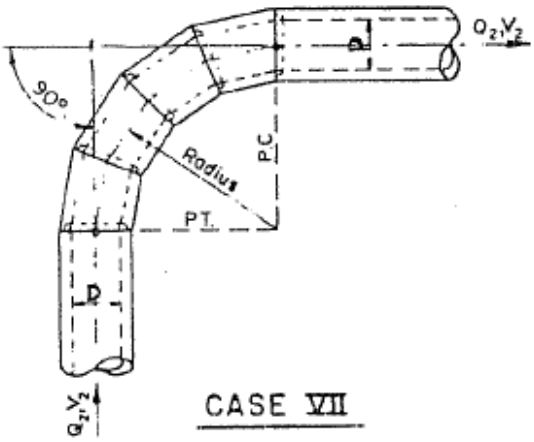


CASE VII

CONDUIT ON 90° CURVES*

NOTE Head loss applied at PC for length of curve

Radius = Dia. of Pipe $h_j = 0.50 \frac{V_2^2}{2g}$

Radius = (2-8) Dia of Pipe $h_j = 0.25 \frac{V_2^2}{2g}$
2 to 8 Pipe Diams.

Radius = (8-20) Dia of Pipe $h_j = 0.10 \frac{V_2^2}{2g}$
8 to 20 Pipe Diams.

Radius = Greater than 20 Dia. of Pipe $h_j = 0$

* When curves other than 90° are used, apply the following factors to 90° curves
60° curve 85%
45° curve 70%
22 ½° curve 40%

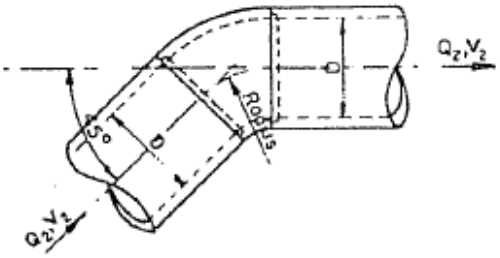


CASE VIII

BENDS WHERE RADIUS IS EQUAL TO DIAMETER OF PIPE

NOTE Head loss applied at begining of bend

90° Bend $h_j = 0.50 \frac{V_2^2}{2g}$

60° Bend $h_j = 0.43 \frac{V_2^2}{2g}$

45° Bend $h_j = 0.35 \frac{V_2^2}{2g}$

22 ½° Bend $h_j = 0.20 \frac{V_2^2}{2g}$

| | | |
|---|---|---|
| City of Highland Village | MINOR HEAD LOSSES DUE TO TURBULENCE AT STRUCTURES CONTINUED | FIGURE 5-4 |

# 6.0 DESIGN OF ENCLOSED STORM DRAINAGE SYSTEMS

## 6.1 GENERAL

All storm drains shall be designed by the application of the Manning Equation either directly or through the appropriate charts or nomographs. In the preparation of hydraulic designs, a thorough investigation shall be made of all existing structures and their performance on the waterway in question.

The design of a storm drainage system should be governed by the following six conditions:

1. The system must accommodate all surface runoff resulting from the 5-year, 10-year, 25-year, 50-year and 100-year design storms without serious damage to physical facilities or substantial interruption of normal traffic.

2. Runoff resulting from storms exceeding the 100-year design storm (200-year and 500-year flood storms) must be anticipated and disposed of with minimum damage to physical facilities and minimum interruption of normal traffic.

3. The storm drainage system must have a maximum reliability of operation.

4. The storm drainage system shall be designed so that construction may proceed in an efficient and orderly manner, with minimum disruption of existing facilities, including streets and utilities.

5. The storm drainage system must require minimum maintenance and must be accessible for maintenance operations.

6. The storm drainage system must be adaptable to future expansion with minimum additional cost.

An example to the design of a storm drainage system is outlined in Sections 6.3 and 6.4. The design theory has been presented in the preceding sections.

## 6.2 PRELIMINARY DESIGN CONSIDERATIONS

Preliminary design considerations are as follows:

1. Prepare a drainage map of the entire area to be drained by the proposed improvements in accordance with the requirements of Section 11.3. Contour maps may provide topographic information for the drainage area map when supplemented by field reconnaissance. Also consider type of ground cover and vegetation that may be affected during development.

2. Locate any steep slopes.

3. Locate wetlands, wooded areas, tree clusters and critical habitat areas.

4. Locate existing storm drainage facilities on and off site which may impact the project design.

5. Make a tentative layout of the proposed storm drainage system, locating all inlets, manholes, mains, laterals, ditches, culverts, etc.

6. Outline the drainage area for each inlet in accordance with present and future street development.

7. Located all existing underground utilities.

8. Locate areas where buffers and setbacks along water bodies may be required.

9. Determine soil types and their susceptibility to erosion.

10. Establish the minimum inlet time of concentration.

11. Establish the permissible spread of water on all streets within the drainage area.

## 6.3 INLET SYSTEM

Determining the size and location of inlets is largely a trial-and-error procedure. Using the criteria outlined in Sections 2.0, 3.0 and 4.0 of this manual, the following steps will serve as a guide to the procedure to be used.

1. Beginning at the upstream end of the project drainage basin, outline a trial sub area and calculate the runoff from it.

2. Compare the calculated runoff to the allowable street capacity. If the calculated runoff is greater than the allowable street capacity, reduce the size of the trial sub area. If the calculated runoff is less than street capacity, increase the size of the trial sub area. Repeat this procedure until the calculated runoff equals the allowable street capacity. This is the first point at which a portion of the flow must be removed from the street. Note that other features such as street intersections may require that inlets be located before the allowable street capacity is reached. When selecting the percentage of flow to be removed by an inlet and, consequently, the size of the inlet, the design engineer shall compare the street capacity with the additional runoff entering the street downstream of the inlet.

3. Record the inlet size, the amount of intercepted flow and amount of flow carried over (bypassing the inlet).

4. Continue the above procedure for other sub areas until a complete system of inlets has been established. Remember to account for carryover from one inlet to the next.

5. After a complete system of inlets has been established, modification should be made to accommodate special situations such as point sources of large quantities of runoff, and variation of street alignments and grades.

6. After the inlets have been located and sized, the inlet pipes can be designed.

7. Inlet pipes are sized to carry the volume of water intercepted by the inlet. Inlet pipe capacities may be controlled by the pipe gradient available or by entry conditions into the pipe at the inlet. Inlet pipe sizes should be determined for both conditions and the larger size used.

## 6.4 STORM SEWER SYSTEM

After computation of the quantity of storm runoff entering each inlet, the storm sewer system required to carry the accumulated runoff is designed. It should be noted that the quantity of flow to be carried by any particular section of the storm sewer system is not the sum of the inlet design quantities of all inlets above that section of the system, but is less than this total. This situation results from an increasing time of concentration as runoff passes along the storm sewer system, causing a corresponding decrease in the rainfall intensity.

### 6.4.1 Storm Sewer Pipe

The proposed ground line profile is now used in conjunction with the previous runoff calculations. The elevation of hydraulic gradient is arbitrarily established approximately 2 feet below the proposed ground surface. When this tentative gradient is set and the design discharge is determined, a Manning flow chart may be used to determine the pipe size and velocity.

It is probable that the tentative gradient will have to be adjusted at this point since the intersection of the discharge and the slope on the chart will likely occur between standard pipe sizes. Velocities can be read directly from a Manning Flow Chart based on a given discharge, pipe size and gradient slope.

Once pipe sizes have been selected for the storm sewer system, the hydraulic gradient must be recalculated to incorporate had losses which occur within the system. At each point where an inlet pipe connects to the main pipe, the hydraulic gradient of the inlet pipe must be checked to ensure that it remains below the gutter grade at the inlet. The hydraulic gradient should be plotted directly on the construction plan profile.

### 6.4.2 Pipe Size changes, Junctions, Inlets and Manholes

1. Head losses must be calculated and incorporated in the hydraulic gradient for all pipe size changes, junctions, inlets, manholes or other features which change the flow characteristics within the storm sewer system.

2. Determine the velocity of flow for the incoming pipe (main line) at the pipe size change, junction, inlet or manhole.

3. Determine the velocity of flow for the outgoing pipe (main line) at the pipe size change, junction, inlet or manhole

4. Compute the velocity head for the incoming velocity (main line).

5. Compute the velocity head for the outgoing velocity (main line).

6. Determine the head loss coefficient $K_1$ at the design point from Table 5-4 or Figures 5-3 and 5-4.

7. Compute the head loss at the pipe size change, junction, inlet or manhole, using the following formula:

$$H_1 = K_1 \frac{V_2^{\,2} - V_1^{\,2}}{2\,g}$$

8. Compute the hydraulic gradient at the upstream end of the junction as if the junction were not there.

9. Add head loss to hydraulic gradient elevation to obtain hydraulic gradient elevation at the upstream end of the junction.

All information shall be recorded on the plans for convenient review.

### 6.4.3 Outlet Erosion Control

All storm sewer designs shall include a method of ensuring erosion control at the outlet. Methods may include outlet alignment, channel lining (concrete, gabions, rock riprap, etc.) near the outlet, concrete outlet slabs with sidewalls and stilling basins.

All information shall be recorded on the submitted plans or in tabular form convenient for review.

# 7.0 FLOW IN OPEN CHANNELS

## 7.1 GENERAL

The benefits of open channels as an alternative to closed storm sewer systems include lower construction cost, multiple uses for recreational and aesthetic purposes, and potential for detention storage. The disadvantages include larger land requirements and higher maintenance costs. Careful planning and design are needed to minimize the disadvantages and to increase the benefits of open channels.

The ideal channel is a natural one carved by nature over a long period of time. The benefits of such a channel include the following:

1. Velocities are usually low, resulting in longer concentration times and lower downstream peak flows.

2. Channel storage tends to decrease peak flows.

3. Maintenance needs are usually low because the channel is somewhat stabilized.

4. The channel may provide a desirable greenbelt and recreational area, adding significant social benefits.

Channel stability is a well recognized problem in urban hydrology because of the significant increase in runoff which results from urban development. A natural channel must be studied to determine the measures needed to avoid future bottom scour and bank cutting. Erosion control measures shall be employed which protect the integrity of the channel while preserving the natural channel appearance wherever possible.

Generally speaking, the manmade channel which most nearly conforms to the character of a natural channel is the most desirable.

## 7.2 CHANNEL DISCHARGE

### 7.2.1 Manning's Equation

The hydraulic characteristics of channels shall be determined by Manning's equation:

$$Q = \frac{1.486\ A\ R^{2/3}\ (S)^{1/2}}{n}$$

| | | | |
|---|---|---|---|
| where: | Q | = | total discharge (cfs) |
| | n | = | coefficient of roughness |
| | A | = | cross-sectional area of channel ($ft^2$) |
| | R | = | hydraulic radius of channel (feet) |
| | S | = | slope of frictional gradient (ft/ft) |

### 7.2.2 Uniform Flow

For a given channel condition of roughness, discharge and slope, there is only one possible depth for maintaining a uniform flow; this depth is the normal depth. When the roughness, depth and slope are known at a channel section, there can only be one discharge for maintaining a uniform flow through that section; this discharge is the normal discharge.

If the channel is uniform and resistance and gravity forces are in exact balance, the water surface will be parallel to the bottom of the channel. This is the condition of uniform flow.

Uniform flow is more often a theoretical abstraction than an actuality. True uniform flow is difficult to find in the field or to obtain in the laboratory. Channels are sometimes designed on the assumption that they will carry uniform flow at normal depths, but because of conditions which are difficult to evaluate, the flow will actually have depths considerably different from uniform depth.

The engineer must be aware of the fact that the uniform flow computation provides only an approximation of what will occur; nevertheless, such computations are useful and necessary for planning.

### 7.2.3 Normal Depth

The normal depth is computed so frequently that it is convenient to use nomographs for various types of cross-sections to eliminate the need for trial-and-error solutions, which are time-consuming. A nomograph for uniform flow in trapezoidal channels in given in Figure 7-1.

## 7.3 WATER SURFACE PROFILES

Open channel flow in urban drainage systems is actually non-uniform because of changing channel sections and alignments, and the effect of culverts, bridges and other structures. This necessitates the use of backwater computations for all final channel design work.

A water surface profile must be computed for all channels as shown on the final plans. Computation of the water surface profile should utilize standard backwater methods or acceptable computer routines, taking into consideration all losses due to changes in velocity, drops, bridge openings and other restrictions.

## 7.4 DESIGN CONSIDERATIONS

In general, manmade channels should have a trapezoidal section of adequate cross-sectional area to take care of uncertainties in runoff estimates, changes in channel coefficients, channel obstructions and silt accumulation.

Accurate determination of the "n" value for each channel reach should be based on experience and judgment with regard to the individual channel characteristics. Table 7-1 gives a method of determining the composite roughness coefficient based on actual channel conditions.

Where practicable, unlined channels should have sufficient gradient to provide velocities that will be self-cleaning, but not so great that erosion results. Lined channels, drop structures, check dams or concrete spillways may be required to control the erosion that results from large volumes of water flowing at high velocities. Unless approved otherwise by the City Engineer, channel velocities in manmade channels shall not exceed 7 fps.

**Table 7-1**

| ROUGHNESS COEFFICIENTS (MANNING'S n) AND ALLOWABLE VELOCITIES FOR NATURAL CHANNELS | | |
|---|---|---|
| Channel Description | Manning's n | Max. Permissible Channel Velocity (ft/s) |
| **Minor Natural Streams** | | |
| Fairly regular section | | |
| Some grass and weeds, little or no brush | 0.03 | 3 to 6 |
| Dense growth of weeds, depth of flow materially greater than weed height | 0.035 | 3 to 6 |
| Some weeds, light brush on banks | 0.035 | 3 to 6 |
| Some weeds, heavy brush on banks | 0.05 | 3 to 6 |
| Some weeds, dense willows on banks | 0.06 | 3 to 6 |
| For trees within channels with branches submerged at high stage, increase above values by | 0.01 | |
| Irregular section with pools, slight channel meander, increase above values by | 0.01 | |
| Floodplain – Pasture | | |
| Short grass | 0.03 | 3 to 6 |
| Tall grass | 0.035 | 3 to 6 |
| Floodplain – Cultivated Areas | | |
| No crop | 0.03 | 3 to 6 |
| Mature row crops | 0.035 | 3 to 6 |
| Mature field crops | 0.04 | 3 to 6 |
| Floodplain – Uncleared | | |
| Heavy weeds scattered brush | 0.05 | 3 to 6 |
| Wooded | 0.12 | 3 to 6 |
| **Major Nautal Steams** | | |
| Roughness coefficient is usually less than for minor streams of similar description on account of less effective resistance offered by irregular banks or vegetation on banks. Values of "n" for larger streams of mostly regular sections, with no boulders or brush | Range from 0.028 to 0.060 | 3 to 6 |
| **Unlined Vegetated Channels** | | |
| Clays (Bermuda Grass) | 0.035 | 5 to 6 |
| Sandy and Silty Soils (Bermuda Grass) | 0.035 | 3 to 5 |
| **Unlined Non-Vegetated Channel** | | |
| Sandy Soils | 0.03 | 1.5 to 2.5 |
| Silts | 0.03 | 0.7 to 1.5 |
| Sandy Silts | 0.03 | 2.5 to 3.0 |
| Clays | 0.03 | 3.0 to 5.0 |
| Coarse Gravels | 0.03 | 5.0 to 6.0 |
| Shale | 0.03 | 6.0 to 10.0 |
| Rock | 0.025 | 15 |

Source: iSWM

## 7.5 CHANNEL CROSS-SECTIONS

The channel shape may vary to better suit the particular location and environmental conditions. Trapezoidal or parabolic cross sections are preferred over triangular. Channels with narrow bottoms are difficult to maintain and are conducive to high velocities. Figure 7-2 shows these sections. HEC-RAS shall be used to confirm the water surface profiles in open channels. All channel geometrics are subject to review and approval by the City Engineer.

### 7.5.1 Side Slope

Except in horizontal curves, flatter channel side slopes are preferred over steeper slopes. The preferred maximum side slope in a channel is 4:1, unless otherwise approved by the Director of Public Works/City Engineer. Channel side slopes steeper than 3:1 shall require detailed geotechnical and slope stability analysis. Rock, concrete-lined channels, gabion-mattress lined channels, gabion mattress-lined channels, or those which for other reasons do not required slope maintenance, may have slopes as steep as 2:1, with approval by the Director of Public Works/City Engineer.

### 7.5.2 Depth

Deep channels are difficult to maintain and can be hazardous. Therefore, manmade channels should be as shallow as practical.

### 7.5.3 Bottom Width

Channels with narrow bottoms are difficult to maintain and are conducive to high velocities. It is desirable to design open channels such that the bottom width is at least twice the depth. For trapezoidal channels it is desirable to have a minimum channel bottom width of 6 feet.

### 7.5.4 Velocities

For vegetative channels, flow velocities shall not exceed the maximum permissible velocities given in Table 7-1

### 7.5.5 Pilot Channels

Low flows from urban areas may require special attention in the design of channels. If erosion of the channel bottom appears to be a likely problem, low flows may be carried in a paved pilot channel which has a capacity of 5% of the design peak flow. Care must be taken to ensure that low flows are directed into the pilot channel without eroding out a parallel channel. Pilot channels should include adequate toewalls to prevent undermining, Erosion control mats are also recommended to allow faster growth of natural vegetation, seeding or hydromulching before erosion commences. Pilot channels shall also be designed to permit maintenance vehicle passage along the channel.

### 7.5.6 Freeboard

For channels which flow at higher velocities, the combined effects of surface roughness, wave action, air bulking and splash are quite erosive along the top of the flow. Freeboard must be provided between the top of the flow and the top of the channel bank to prevent damage to adjacent improvements. Unless approved otherwise by the Director of Public Works/City Engineer, all channels shall have a minimum height of freeboard of 1 foot based on the 100-year design storm based on a fully developed watershed.

## 7.6 STRUCTURES

The designer must exercise sound judgment in the design of hydraulic structures to ensure the long-term integrity of the structures while minimizing their maintenance requirements. The designer of hydraulic structures should refer to standards adopted by the U.S. Army Corps of Engineers and the Bureau of Reclamation, which are based on proven hydraulic models. Paved trapezoidal drop structures tend to require excessive maintenance and should be avoided. Erosion protection along and at each end of structures, along with adequate toewalls and foundation drainage, is mandatory. In addition, the use of hydraulic structures in the urban environment requires that consideration be given to the structures' appearance.

## 7.7 RIGHT-OF-WAY REQUIRED FOR OPEN CHANNELS

The Director of Public Works/City Engineer may require the dedication of drainage ways and/or floodways for open channels, creeks and flumes to the City of Highland Village. Rights-of-way shall encompass all areas having a ground elevation below the higher of 1 foot above the water surface elevation associated with the design flood or the top of the high bank, whichever provides the larger area. In all cases, the right-of-way shall also include at least a 15 foot wide maintenance strip along both sides of the channel or, if the City Engineer so allows, at least a 20 foot wide maintenance strip along one side of the channel. Streets, alleys, bicycle paths, etc. alongside the channel may serve as all or part of the maintenance right-of-way.

Drainage right-of-way for flumes shall provide sufficient width to permit future maintenance accessibility, and in no case shall be less than 20 feet wide.

## 7.8 STREETS ALONG DRAINAGE WAYS

Where the City of Highland Village has designated a floodway or floodplain as a dedicated drainage way or part of the City park system, the following conditions may be required:

1. Parallel streets fronting along the park or dedicated drainage way.
2. Cul-de-sacs which provide public access fronting on the park.
3. Loop streets which provide public access fronting on the park.

In all cases, the Director of Public Works/City Engineer shall have the right to review and approve the proposed street alignment fronting on City parks, and shall in cases where the alignment is unsatisfactory, negotiate a satisfactory alignment with the developer.

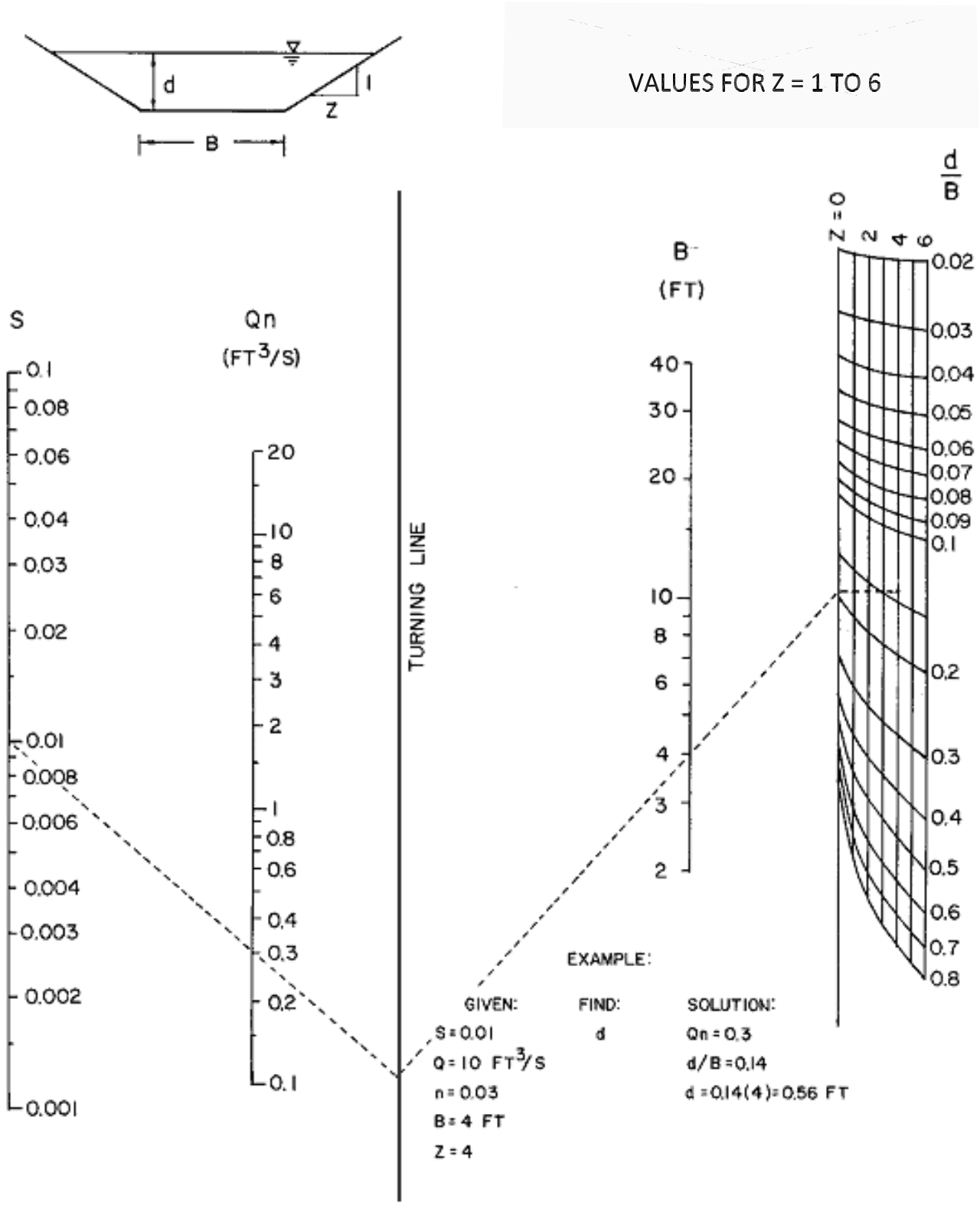


SOLUTION TO MANNING'S EQUATION FOR CHANNELS OF VARIOUS SIDE SLOPES

FIGURE 7-1

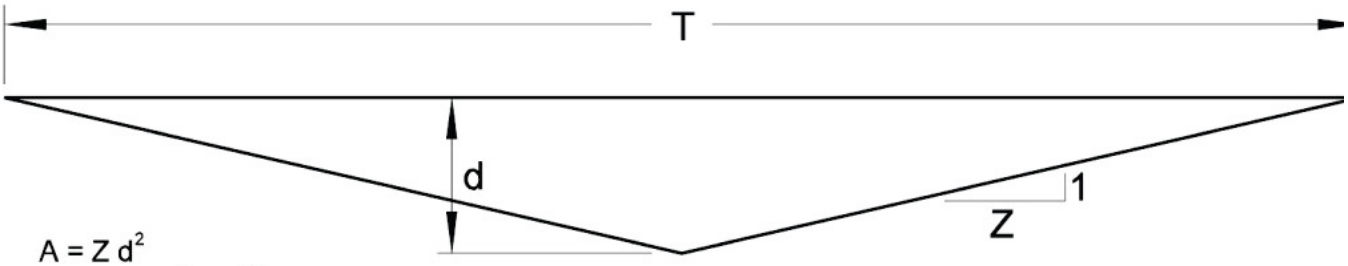


$A = Z\,d^2$

$P = 2\,d\,(Z^2 + 1)^{0.5}$

$T = 2\,d\,Z$

## V - Shape

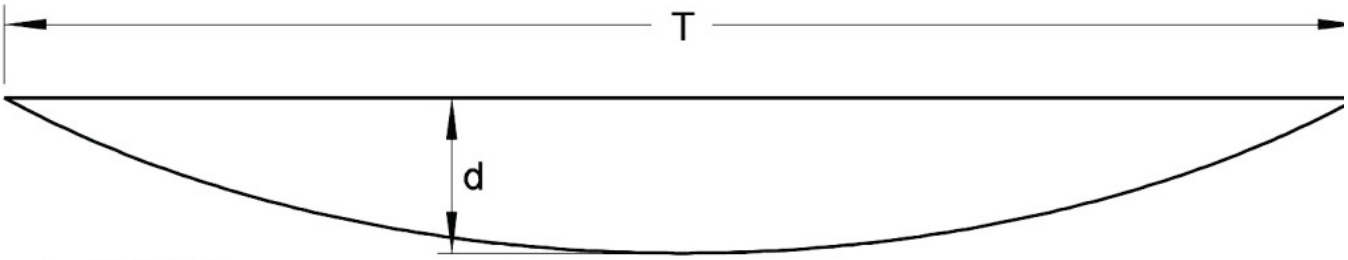


$A = (2 / 3)\,T\,d$

$P = 0.5\,(16\,d^2 + T^2)^{0.5} + ((T^2 / 8\,d)\,\ln_e((4\,d + (16\,d^2 + T^2)^{0.5}) / T))$

$T = 1.5\,(A / d)$

## Parabolic

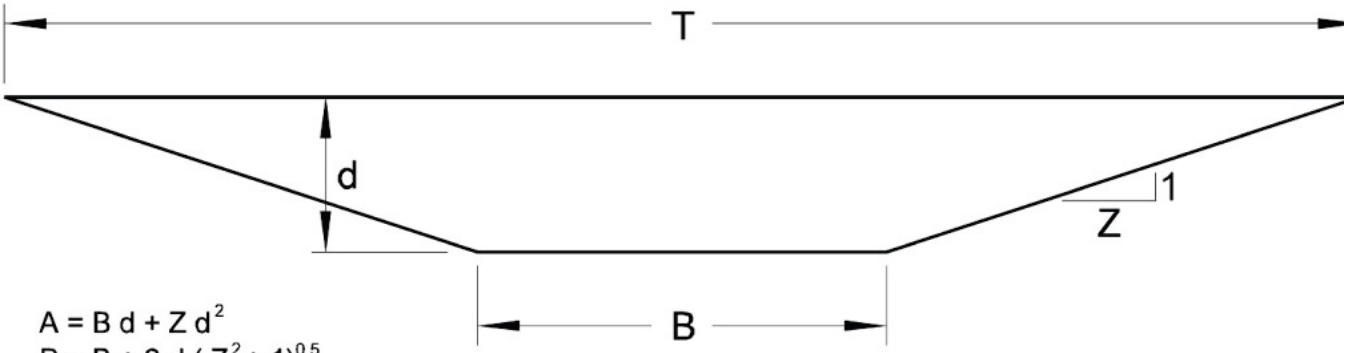


$A = B\,d + Z\,d^2$

$P = B + 2\,d\,(Z^2 + 1)^{0.5}$

$T = B + 2\,d\,Z$

## Trapezoidal

| | | |
|---|---|---|
| City of Highland Village | TYPICAL CHANNEL GEOMETRY'S | FIGURE 7-2 |

## 8.0 DESIGN OF CULVERTS

### 8.1 GENERAL

The function of a drainage culvert is to pass the design storm flow under a roadway or railroad without causing excessive backwater and without creating excessive downstream velocities. The design engineer shall keep energy losses and discharge velocities within reasonable limits when selecting a structure which will meet these requirements. Reinforced concrete culverts shall be required for all culverts which will be maintained by the City of Highland Village.

### 8.2 QUANTITY OF FLOW

The 5-year, 10-year, 25-year, 50-year and 100-year design storms shall be determined for culvert design calculations. In general, for culverts which carry flows under roadways, the freeboard between the upstream 100-year design water surface and the top of curb elevation shall be a minimum of 2 feet. This vertical distance provides a safety margin to protect against unusual clogging of the culvert, and further protects the street against future changes in the surrounding conditions.

For culverts which carry flow under facilities other than roadways, the designer shall provide an adequate freeboard to protect the facilities from flooding.

### 8.3 HEADWALLS AND ENDWALLS

The normal functions of properly designed headwalls and endwalls are to anchor the culvert to prevent movement due to lateral pressures, to control erosion and scour resulting from excessive velocities and turbulence, and to prevent adjacent soil from sloughing into the waterway opening. All headwalls shall be constructed of reinforced concrete and may be straight parallel headwalls, flared headwalls, sloped headwalls or warped headwalls with or without aprons as may be required by site conditions.

### 8.3.1 Conditions at Entrance

It is important to recognize that the operational characteristics of a culvert may be completely changed by the shape or conditions at the inlet or entrance. The design of culverts must include consideration of energy losses that may occur at the entrance. The entrance head losses may be determined by the following equation:

$$h_e = K_e \frac{V_2^{\,2} - V_1^{\,2}}{2\,g}$$

| | | | |
|---|---|---|---|
| where: | $h_e$ | = | entrance head loss (feet) |
| | $K_e$ | = | entrance loss coefficient as shown in Table 8-1 |
| | $V_2$ | = | velocity of flow in the invert (fps) |
| | $V_1$ | = | velocity of approach (fps) as shown in Table 8-2 |

In order to compensate for the retarding effect on the approach velocity in channels produced by the creation of the headwater pools at the culvert entrance, the approach velocity in the channel ($V_2$) shall be reduced by the factors as shown in Table 8-2.

**Table 8-1**

VALUES OF ENTRANCE LOSS COEFFICIENTS "$K_e$"

| Type of Structure and Entrance Design | Value of $K_e$ |
|---|---|
| **Reinforced Concrete Box** | |
| Submerged Entrance | |
| Parallel Wingwalls | 0.5 |
| Flared Wingwalls | 0.4 |
| Free Surface Flow | |
| Parallel Wingwalls | 0.5 |
| Flared Wingwalls | 0.15 |
| **Concrete Pipe** | |
| Projecting from Fill, Socket End | 0.2 |
| Projecting from Fill, Square Cut End | 0.5 |
| Headwall or Headwall and Wingwalls | |
| Socket End of Pipe | 0.2 |
| Square Edge | 0.5 |
| End-Section Conforming to Fill Slope | 0.5 |
| **Corrugated Metal Pipe or Pipe-Arch** | |
| Projecting from Fill (no headwall) | 0.9 |
| Headwall or Headwall and Wingwalls | 0.5 |
| End-Section Conforming to Fill Slope | 0.5 |

| **Table 8-2**<br>REDUCTION FACTORS FOR VELOCITY OF APPROACH | | |
|---|---|---|
| Velocity of Approach $V_a$ (fps) | Description of Conditions | $V_1$ to be using in Formula for $h_e$ |
| 0-6 | All Culverts | $V_1 = V_a$ |
| 6-12 | Good alignment of the approach channel; headwater pool permissible within the right-of-way | $V_2 = 0.5\ V_a$ |
| 12-15 | Good alignment of the approach channel; channel slopes have been lined; limited backwater pool permissible within the right-of-way | $V_1 = O$ |

Source: HDS-5

8.3.2 Type of Headwall or Endwall

In general, the following guidelines should be used in the selection of the type of headwall or endwall:

- Parallel Headwall and Endwall

  1. Approach velocities are low (below 6 fps).
  2. Backwater pools may be permitted.
  3. Approach channel is undefined.
  4. Ample right of way or easement is available.
  5. Downstream channel protection is not required.

- Flared Headwall and Endwall

  1. Channel is well defined.
  2. Approach velocities are between 6 and 10 fps.
  3. Medium amounts debris exist.

  The wings of flared headwalls should be located with respect to the direction of the approaching flow instead of the culvert axis.

- Warped Headwall and Endwall

  1. Channel is well defined and concrete lined.
  2. Approach velocities are between 8 and 20 fps.
  3. Medium amounts of debris exist.

  Warped headwalls are effective with drop-down aprons to accelerate flow through the culvert, and the endwalls are effective in transitioning flow from closed conduit flow to open channel flow at the outfall. This type of headwall should be used only where the drainage structure is large and the available right-of-way or easement is limited.

### 8.3.3 Special Headwall and Endwall Designs

Culvert designs which involve improved inlet conditions such as side-tapered, slope-tapered or flared inlets must be submitted with design calculations to the City Engineer. Improved inlets may be used to improve the hydraulic efficiency of culvert entrances for culverts which operate under inlet control.

## 8.4 SPECIAL CULVERT DESIGNS

Culvert cross-sections are typically circular or box-shaped; however, other culvert sections such as elliptical or pipe-arch may be considered by the Director of Public Works/City Engineer provided that acceptable design calculations are provided.

## 8.5 CULVERT DESIGN CRITERIA

### 8.5.1 General

The velocity of discharge from culverts should be limited as shown in Table 8-4. Consideration must be given to the effect of high velocities, eddies or other turbulence on the natural channel, downstream property and roadway embankments.

The maximum allowable velocity of flow inside a corrugated metal pipe is 15 feet per second. There is no maximum velocity for reinforced concrete pipe but protection shall be provided for erosion protection for the culvert discharge.

The minimum velocity to ensure self-cleaning during partial depth flow is 2.5 feet per second. All other velocities must be approved by the Director of Public Works/City Engineer.

The maximum slope using concrete pipe (RCP) without restraints is 0.1 feet/foot or 10%. For corrugated metal pipe (CMP) the maximum slope before restraints is .14 feet/foot or 14%.

### 8.5.2 Bends

A straight culvert alignment is desirable to avoid clogging, reduce construction cost and reduce hydraulic inefficiency. Although when site conditions dictate a change of alignment, either in plan or profile, a bend can be added. A change in alignment in profile might be used to avoid costly excavation and is generally referred to as a "Broken Back" culvert. A change in alignment in plan (horizontal bends) might be used to avoid obstacles or realign the flow.

When designing nonlinear culverts, energy losses due to bends must be considered. If the culvert operates in inlet control there will be no increase in headwater. If the culvert operates in outlet control a slight increase in energy loss and headwater will result. To minimize energy loss, bends shall not exceed 15 degrees and be spaced at least 50 feet apart. Under the conditions listed before the energy losses due to bends can be ignored.

The bend losses can be calculated using the following equation and then added to the other outlet losses.

$$H_b = K_b \frac{V_2^{\,2}}{2\,g}$$

where $H_b$ = headloss due to the bend (feet)
$K_b$ = Bend loss coefficient found in Table 8-3
$V$ = Velocity of the water (fps)

## 8.6 CULVERT FLOW CONTROLS

Generally, the hydraulic control in a culvert will be at the outlet if the culvert is operating in a mild slope regime. Entrance control usually occurs if the culvert is operating in a steep slope regime.

For outlet control, the head losses due to the tailwater and barrel friction are predominant in controlling the headwater of the culvert. The entrance will allow the water to enter the culvert faster than the backwater effects of the tailwater and barrel friction will allow it to flow through the culvert.

For entrance control, the entrance characteristics of the culvert are such that the entrance head losses are predominant in determining the headwater of the culvert. The barrel will carry water through the culvert more efficiently than the water can enter the culvert.
Each culvert flow, however classified, is dependent upon one or both of these controls; therefore, because of the importance of these controls, further discussion follows.

## 8.7 SELECTION OF CULVERT SIZE AND TYPE

### 8.7.1 Culvert Operating Conditions

Culverts shall be selected based on hydraulic principles, economy of size and shape, and with a resulting headwater depth which will not cause damage to adjacent property. It is essential to the proper design of a culvert that the conditions under which the culvert will operate are known. The five types of operating conditions are listed below.

| | |
|---|---|
| Type I | Flowing Part Full with Outlet Control and Tailwater Depth Below Critical Depth |
| Type II | Flowing Part Full with Outlet Control and Tailwater Depth Above Critical Depth |
| Type IIIA | Flowing Part Full with Inlet Control |
| Type IIIB | Flowing Part Full with Inlet or Outlet Control |
| Type IVA | Flowing Full with Submerged Outlet |
| Type IVB | Flowing Full with Partially Submerged Outlet |

| **Table 8-3**<br>LOSS COEFFICIENTS FOR BENDS | | | |
|---|---|---|---|
| $\frac{(Radius\ of\ Bend)}{(Equivalent\ Diameter)}$ | Angle of Bend Degrees | | |
| | 90 | 45 | 22.5 |
| 1 | 0.50 | 0.37 | 0.25 |
| 2 | 0.30 | 0.22 | 0.15 |
| 4 | 0.25 | 0.19 | 0.12 |
| 6-8 | 0.15 | 0.11 | 0.08 |

Source: HDS-5

| **Table 8-4**<br>CULVERT DISCHARGE – VELOCITY LIMITATIONS | |
|---|---|
| Downstream Conditions | Maximum Allowable Discharge Velocity (fps) |
| Unlined Vegetated Channels | |
| Clays (Bermuda Grass) | 5-6 |
| Sandy and Silty Soils (Bermuda Grass) | 3-5 |
| Unlined Non-Vegetated Channels | |
| Sandy Soils | 1.5-2.5 |
| Silts | 0.7-1.5 |
| Sandy Silts | 2.5-3 |
| Clays | 3-5 |
| Coarse Gravels | 5-6 |
| Shale | 6-10 |
| Rock | 15 |
| Paved or Riprap Apron | 15 |

Source: iSWM

8.7.2 Type I

Culvert Flowing Part Full with Outlet Control and Tailwater Depth Below Critical Depth

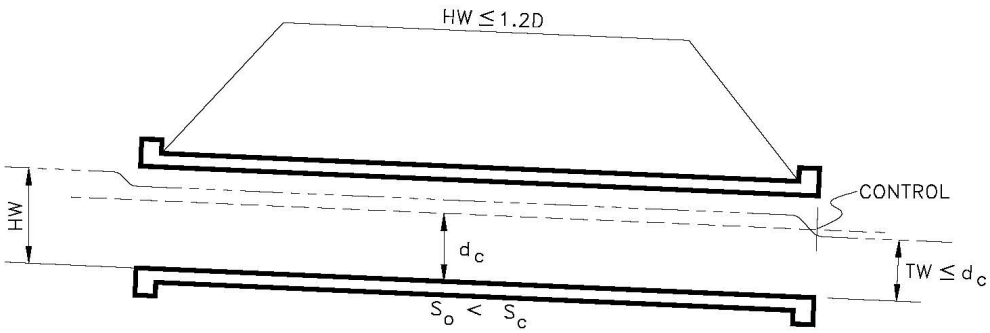


Conditions

The entrance is unsubmerged (HW$\leq$ 1.2D), the slope at design discharge is sub-critical ($S_o$<$S_c$) and the tailwater is below critical depth (TW$\leq d_c$).

The above condition is a common occurrence where the natural channels are on flat grades and have wide, flat floodplains. The control is critical depth at the outlet.

In culvert design, it is generally considered that the headwater pool maintains a constant level during the 100 –year design storm. If this level does not submerge the culvert inlet, the culvert flows part full.

If critical flow occurs at the outlet, the culvert is said to have "Outlet Control." A culvert flowing part full with outlet control will require a depth of flow in the barrel of the culvert greater than critical depth while passing through critical depth at the outlet.

The capacity of a culvert flowing part full with outlet control and a tailwater depth below critical depth shall be governed by the following equation when the approach velocity is considered zero:

$$HW = d_c + \frac{(V_c)^2}{2\,g} + h_e + h_f - S_o\,L$$

| | | | |
|---|---|---|---|
| where: | HW | = | Headwater depth above the invert of the upstream end of the culvert (feet). Headwater must be equal to or less than 1.2D or entrance is submerged and Type IV operation will result. |
| | $d_c$ | = | Critical depth of flow (feet) |
| | | = | $\left[\frac{q^2}{32.2}\right]^{1/3}$ |
| | q | = | Discharge per foot of width for rectangular channels |
| | D | = | Diameter of pipe or height of box (feet) |
| | $V_c$ | = | Critical velocity occurring at critical depth (fps) |
| | $h_e$ | = | Entrance head loss (feet) |
| | | = | $K_e\,\frac{V_c^{\,2}}{2\,g}$ |
| | $K_e$ | = | Entrance loss coefficient (see Table 8-1). |
| | $h_f$ | = | Friction head loss (feet) |
| | | = | $S_fL$ |
| | $S_f$ | = | Friction slope of slope that will produce uniform flow. For Type I operation, the friction slope is based upon $1.1d_c$ (See Figures 8-2 and 8-5.) |
| | $S_o$ | = | Slope of culvert (ft/ft) |
| | L | = | Length of culvert (feet) |

8.7.3 Type II

Culvert Flowing Part Full with Outlet Control and Tailwater Depth Above Critical Depth

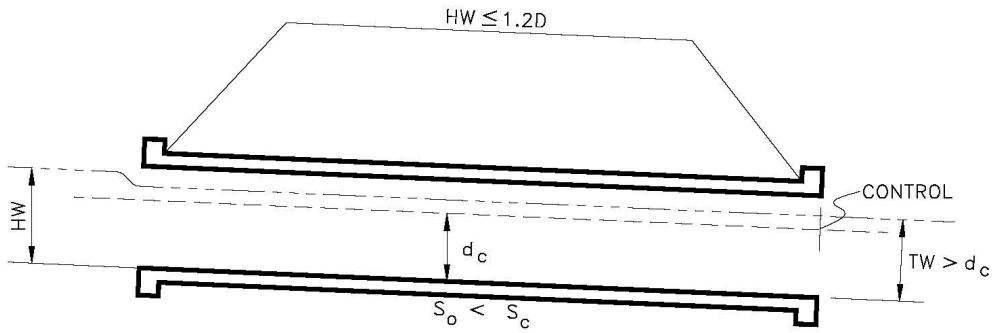


Conditions

The entrance is unsubmerged (HW≤1.2D), the slope at design discharge is sub-critical ($S_o$<$S_c$) and the tailwater is above critical depth (TW>$d_c$)

The above condition is a common occurrence where the channel is deep, narrow and well-defined.

If the headwater pool elevation does not submerge the culvert inlet, the slope at design discharge is sub-critical, and the tailwater depth is above critical depth, the control is said to occur at the outlet, and the capacity of the culvert shall be governed by the following equation when the approach velocity is considered zero:

$$HW = TW = \frac{(V_{tw})^2}{2\,g} + h_e + h_r - S_o\,L$$

where:

| | | |
|---|---|---|
| HW | = | Headwater depth above the invert of the upstream end of the culvert (feet). Headwater depth must be equal to or less than 1.2D or entrance is submerged and Type IV operation will result. |
| TW | = | Tailwater depth above the invert of the downstream end of the culvert (feet) |
| $V_{tw}$ | = | Culvert discharge velocity at tailwater depth (fps) |

| | | |
|---|---|---|
| $h_e$ | = | Entrance head loss (feet) |
| | = | $K_e \frac{V_{TW}^2}{2g}$ |
| $K_e$ | = | Entrance loss coefficient (Table 8-1). |
| $h_f$ | = | Friction head loss (feet) |
| | = | $S_f L$. |
| $S_f$ | = | Friction slope or slope that will produce uniform flow. For Type II operation, the friction slope is based upon TW depth. |
| $S_o$ | = | Slope of culvert (ft/ft) |
| L | = | Length of culvert (feet) |

8.7.4 Type IIIA

Culvert Flowing Part Full With Inlet Control

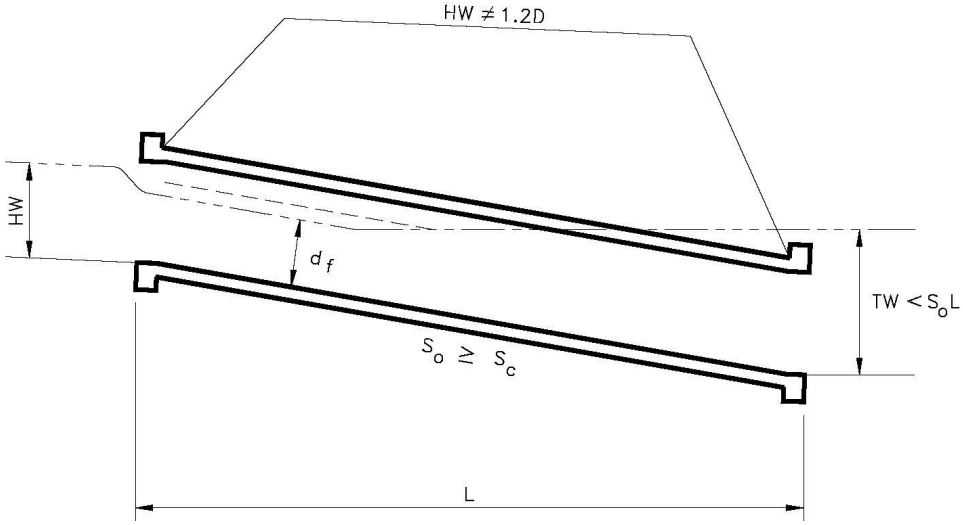


Conditions

Entrance may be submerged or unsubmerged (HW≠1.2D) and the slope at design discharge is equal to or greater than critical slope ($S_o \geq S_c$). The tailwater depth is less than the vertical drop in the culvert from the upstream flow line to the downstream flow line ($TW < S_oL$) (tailwater elevation is lower than upstream flow line). Tailwater depth with respect to D is inconsequential as long as the above conditions are true.

This condition is a common occurrence for culverts in rolling or mountainous country. The control is critical depth at the entrance for headwater values up to about 1.2D. Control is the entrance geometry for headwater values over about 1.2D.

Headwater is determined from empirical curves in the form of nomographs (see Figures 8-3, 8-8 and 8-9). If the tailwater is greater than D, the outlet velocity is based on full flow at the culvert. If tailwater is less than D, the outlet velocity is based on uniform depth of the culvert.

8.7.5 Type IIIB

Culvert Flowing Part Full With Inlet or Outlet Control

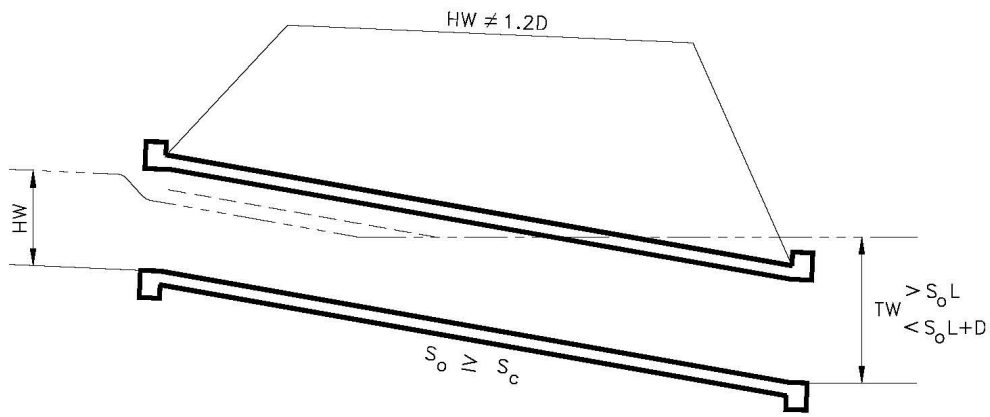


Conditions

Entrance may be submerged or unsubmerged (HW≠1.2D), the slope at design discharge is equal to or greater than critical slope ($S_o \geq S_c$). The tailwater depth is greater than the vertical drop in the culvert from the upstream flow line to the downstream flow line ($TW > S_oL$) (tailwater elevation is above the upstream flow line). Tailwater depth is less than the sum of the vertical drop in the culvert from the upstream flow line to the downstream flow line and D. Tailwater depth with respect to D is inconsequential as long as the above conditions are true.

This condition is a common occurrence for culverts in rolling or mountainous country. The control for this may be at the entrance or outlet, or control may vacillate between the two. For this reason, headwater is determined for both entrance control and outlet control, and the higher of the two determinations should be used. Entrance control headwater is determined from imperial curves in the form of nomographs (see Figures 8-3, 8-8 and 8-9). Outlet control headwater is determined by procedures indicated for Type IVA or IVB (depending on tailwater depth with respect to D). If tailwater depth is less than D, the outlet velocity should be based on tailwater depth. If the tailwater depth is greater than D, outlet velocity should be based on full flow at the outlet.

8.7.6 Type IVA

Culvert Flowing Part Full With Submerged Outlet

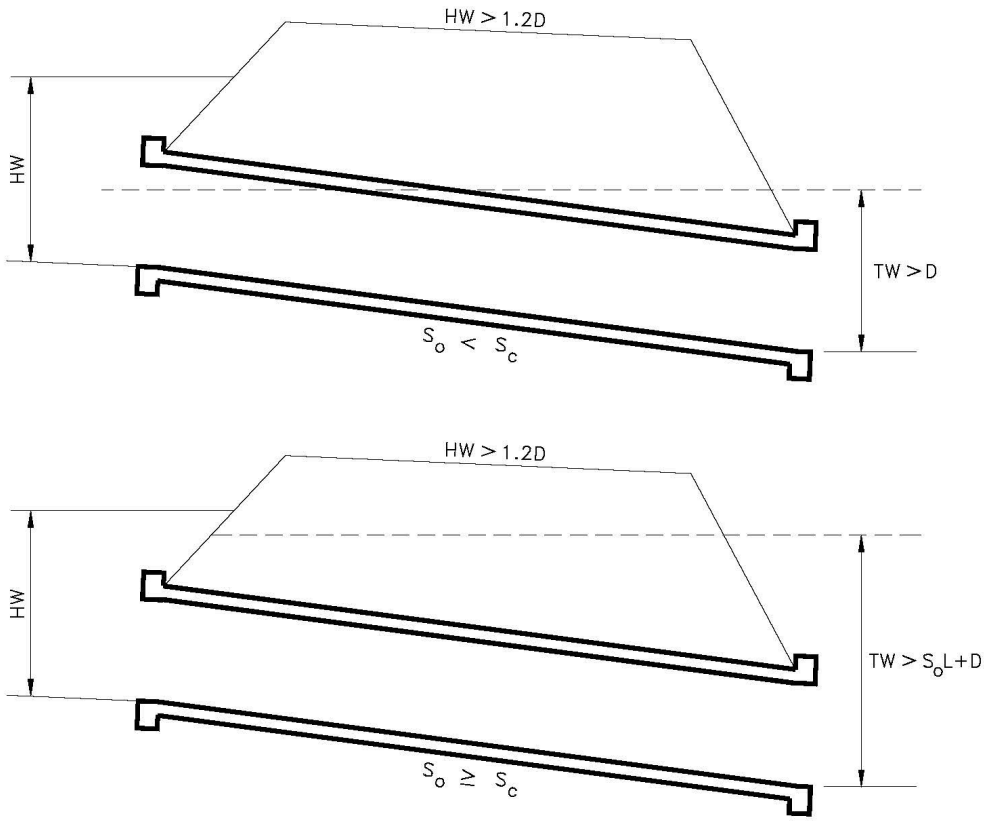


Conditions

The entrance is usually submerged (HW>1.2D), the slope at the design discharge is less than the critical slope ($S_o$<$S_c$), and tailwater depth is greater than D (TW>D). The tailwater completely submerges the outlet or equal to critical slope ($S_o \geq S_c$), and tailwater is greater than the sum of the vertical drop in the culvert from the upstream flow line to the downstream flow line and D (TW> $S_o$L+D).

Most culverts flow with a free outlet, but depending on topography, a tailwater pool of a depth sufficient to submerge the outlet may form at some installations. Generally, these will be considered at the outlet. For an outlet to be submerged, the depth at the outlet must be equal to or greater than the diameter of the pipe or height of box. The capacity of a culver flowing full with a submerged outlet shall be governed by the following equation when the approach velocity is considered zero. Outlet velocity is based on full flow at the outlet.

$$HW = H + TW - S_o L$$

| | | | |
|---|---|---|---|
| where: | HW | = | Headwater depth above the invert of the upstream end of the culvert. Headwater depth must be greater than 1.2D for entrance to be submerged |
| | H | = | Head for culvert flowing full (feet) $H = h_v + h_e + h_f$ |
| | $h_v$ | = | Velocity head (feet) |
| | | = | $\frac{V^2}{2g}$ |
| | V | = | Based on full flow in culvert (fps) |
| | $h_e$ | = | Entrance head (feet) |
| | | = | $K_e h_v$ |
| | $h_f$ | = | Friction head (feet) |
| | | = | $S_f L$ |
| | TW | = | Tailwater depth (feet) |
| | $S_o$ | = | Slope of culvert (ft/ft) |
| | L | = | Length of culvert (feet) |

8.7.7 Type IVB

Culvert Flowing Part Full With Partially Submerged Outlet

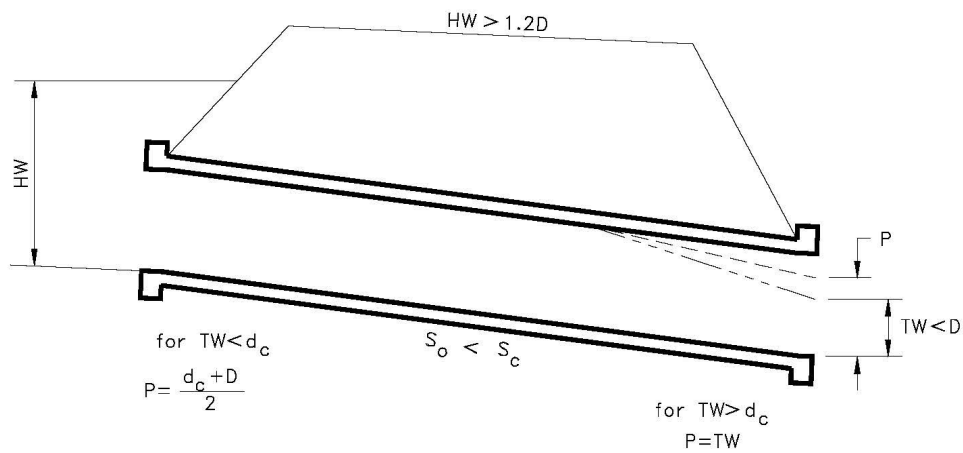


Conditions

The entrance is submerged (HW>1.2D). The tailwater depth is less than D (TW<D).

The capacity of a culvert flowing full with a partially submerged outlet shall be governed by the following equation when the approach velocity is considered zero. Outlet velocity is based on critical depth if tailwater depth is less than critical depth. If tailwater depth is greater than critical depth, outlet velocity is based on tailwater depth.

$$HW = H + P - S_o L$$

| | | | |
|---|---|---|---|
| where: | HW | = | Headwater depth above the invert of the upstream end of the culvert. Headwater depth must be greater than 1.2D for entrance to be submerged. |
| | H | = | Head for culvert flowing full (feet) $H = h_v + h_e + h_f$ |
| | $h_v$ | = | Velocity head (feet) |
| | | = | $\frac{V^2}{2g}$ |
| | V | = | Based on full flow in culvert (fps) |
| | $h_e$ | = | Entrance head (feet) |
| | | = | $K_e h_v$ |
| | $h_f$ | = | Friction head (feet) |
| | | = | $S_f L$ where $S_f$ is based on full flow in culvert. |

| | | | |
|---|---|---|---|
| P | = | $\frac{(d_c + D)}{2}$ | If TW depth is less than critical depth at design discharge. |
| | = | TW | If TW is greater than critical depth. |
| $d_c$ | = | Critical depth (feet) | |
| D | = | Diameter or height of structure (feet) | |
| $S_o$ | = | Slope of culvert (ft/ft) | |
| L | = | Length of culvert (feet) | |

# 9.0 OUTLET STRUCTURES

## 9.1 GENERAL

The following section shows acceptable outlets to be used with detention and multi-stage detention facilities. Any other type of outlet other then those described in this section are subject to the approval by the City of Highland Village Director of Public Works/City Engineer. Detention and retention pond outlet structures shall be designed as multi-stage outlets, accommodating the 10, 25, 50 and 100 year storm events.

## 9.2 TYPES OF OUTLETS

The acceptable outlets for detention facilities are as follows:

- Pipes/Culverts
- Orifices
- Perforated Risers (Figure 9-2)
- Sharp-Crested Weirs (Figure 9-3)
- Broad-Crested Weirs
- V-Notch Weirs (Figure 9-4)

Combinations of the listed outlets are also accepted. The most common types of outlets can be categorized into four groups: pipes/culverts, orifice-type, weir-type and riser-pipe structures.

## 9.3 PIPES AND CULVERTS

Pipes or culverts can be installed either above or at the flow line of the detention facility. The formulas for pipes and culverts have been discussed in Sections 5.0, 6.0, and 8.0 of this manual.

## 9.4 ORIFICES

Typical orifices are illustrated in Figure 9-1a. The equation for a single orifice is:

$$Q=C_oA_o(2gH_o)^{1/2}$$

| | | | |
|---|---|---|---|
| Where | $Q$ | = | Orifice flow rate (cfs) |
| | $C_o$ | = | Discharge coefficient |
| | | = | 0.6 for square-edged and circular orifices |
| | | = | 0.4 for opening in corrugated pipe or any other shape other then square-edged or circular |
| | $A_o$ | = | Area of orifice ($ft_2$) |
| | $H_o$ | = | Effective head on the orifice as measured form the centroid of the opening to the water surface for an unsubmerged orifice |
| | | = | Difference in elevation between the headwater and tailwater if the orifice is submerged |
| | $g$ | = | gravitational acceleration, (32.2 $ft/s^2$) |

For multiple orifices, use the sum of each individual flow rate from the previous equation (Figure 9-1c).

$$Q_{total} = \sum Q_n$$

## 9.5 WEIRS

This section includes equations to calculate the discharge rate of typical section weirs. Typical section weirs include sharp crested, broad crested, and V-notched.

### 9.5.1 Typical Sharp Crested Weirs

Typical sharp crested weirs as illustrated in Figure 9-3 are divided into two categories. Sharp crested weir with no end contraction (Figure 9-3a) and a sharp crested weir with end contractions (Figure 9-3b). Weirs also have 2 design criteria full flowing (Figure 9-3c) and submerged (Figure 9-3d).

For sharp crested weirs with no end contractions use the following equation:

$$Q = 3.33\ L\ H^{2/3}$$

For sharp crested weirs with end contractions use the following equation:

$$Q = 3.33\ (L - 0.2\ H)\ H^{2/3}$$

| | | | |
|---|---|---|---|
| where | Q | = | Discharge rate (cfs) |
| | L | = | Horizontal weir length (ft) |
| | H | = | Head above the weir crest excluding velocity head (feet) |

### 9.5.2 Submerged Sharp Crested Weir

Sharp crested weirs are not as effective once the tail water rises above the weir crest elevation. This condition is called a submerged weir as illustrated in Figure 9-3d. The discharge equation for a submerged sharp crested weir is:

$$Q_s = Q_r \left[1 - \left(\frac{H_2}{H_1}\right)^{2/3}\right]^{0.358}$$

| | | | |
|---|---|---|---|
| where | $Q_s$ | = | Submerged flow (cfs) |
| | $Q_r$ | = | Unsubmerged weir flow from equation (cfs) |
| | $H_1$ | = | Upstream head above crest (ft) |
| | $H_2$ | = | Downstream head above crest (ft) |

### 9.5.3 Broad Crested Weir

A broad crested weir has a relatively long raised channel control crest section. The flow of a broad crested weir can be calculated using the following equation:

$$Q = C_{BCW}\ L\ H^{2/3}$$

| | | | |
|---|---|---|---|
| where | Q | = | Discharge (cfs) |
| | $C_{BCW}$ | = | Broad-crested weir coefficient from table 9-1 |
| | L | = | Length of the weir |
| | H | = | Head above weir crest |

### 9.5.4 V-Notch Weir

A V-notch weir can control the flow through the use of the gradual increase in weir length. A typical V-notched weir is illustrated in Figure 9-4. The discharge though a V-notch weir can be calculated from the following equation:

$$Q = 2.5 \tan(\theta/2)\, h^{5/2}$$

| | | | |
|---|---|---|---|
| where | $Q$ | = | Discharge (cfs) |
| | $\theta$ | = | Angle of V-notch (degrees) |
| | $h$ | = | Head on apex of notch (ft) |

## 9.6 EMERGENCY SPILLWAYS

The purpose of an emergency spillway is to provide a controlled overflow relief for a storm flows in excess of the design discharge for the facility or if the outlets become clogged. A typical design of an emergency spillway can be seen in Figure 9-5. The use of emergency spillways to control design storm runoff is prohibited. Emergency spillways shall only be used if the designed facility becomes overfilled. Emergency spillways carry excess runoff out of the detention and retention facilities. Typically the emergency spillway is composed of a broad crested weir and a shallow channel. Emergency spillways must provide overflow a predetermined route to follow. These routes when feasible shall be open channels, swales, or other approved storage facility.

**Table 9-1** Broad-Crested Weir Coefficient C
BROAD-CRESTED WEIR COEFFICIENT C
BROAD-CRESTED WEIR COEFFICIENT C VALUES AS A FUNCTION OF WEIR CREST
Breadth and Head (coefficient has units of $ft^{0.5}/sec$)[1]

| Head[2] (ft) | Breadth of Crest of Weir (ft) | | | | | | | | | | |
|---|---|---|---|---|---|---|---|---|---|---|---|
| | 0.5 | 0.75 | 1.00 | 1.50 | 2.00 | 2.50 | 3.00 | 4.00 | 5.00 | 10.00 | 15.00 |
| 0.2 | 2.8 | 2.75 | 2.69 | 2.62 | 2.54 | 2.48 | 2.44 | 2.38 | 2.34 | 2.49 | 2.68 |
| 0.4 | 2.92 | 2.80 | 2.72 | 2.64 | 2.61 | 2.60 | 2.58 | 2.54 | 2.50 | 2.56 | 2.70 |
| 0.6 | 3.08 | 2.89 | 2.75 | 2.64 | 2.61 | 2.60 | 2.68 | 2.69 | 2.70 | 2.70 | 2.70 |
| 0.8 | 3.3 | 3.04 | 2.85 | 2.68 | 2.60 | 2.60 | 2.67 | 2.68 | 2.68 | 2.69 | 2.64 |
| 1.0 | 3.32 | 3.14 | 2.98 | 2.75 | 2.66 | 2.64 | 2.65 | 2.67 | 2.68 | 2.68 | 2.63 |
| 1.2 | 3.32 | 3.20 | 3.08 | 2.86 | 2.70 | 2.65 | 2.64 | 2.67 | 2.66 | 2.69 | 2.64 |
| 1.4 | 3.32 | 3.26 | 3.20 | 2.92 | 2.77 | 2.68 | 2.64 | 2.65 | 2.65 | 2.67 | 2.64 |
| 1.6 | 3.32 | 3.29 | 3.28 | 3.07 | 2.89 | 2.75 | 2.68 | 2.66 | 2.65 | 2.64 | 2.63 |
| 1.8 | 3.32 | 3.32 | 3.31 | 3.07 | 2.88 | 2.74 | 2.68 | 2.66 | 2.65 | 2.64 | 2.63 |
| 2.0 | 3.32 | 3.31 | 3.30 | 3.03 | 2.85 | 2.76 | 2.72 | 2.68 | 2.65 | 2.64 | 2.63 |
| 2.5 | 3.32 | 3.32 | 3.31 | 3.28 | 3.07 | 2.89 | 2.81 | 2.72 | 2.67 | 2.64 | 2.63 |
| 3.0 | 3.32 | 3.32 | 3.32 | 3.32 | 3.20 | 3.05 | 2.92 | 2.73 | 2.66 | 2.64 | 2.63 |
| 3.5 | 3.32 | 3.32 | 3.32 | 3.32 | 3.32 | 3.19 | 2.97 | 2.76 | 2.68 | 2.64 | 2.63 |
| 4.0 | 3.32 | 3.32 | 3.32 | 3.32 | 3.32 | 3.32 | 3.07 | 2.79 | 2.70 | 2.64 | 2.63 |
| 4.5 | 3.32 | 3.32 | 3.32 | 3.32 | 3.32 | 3.32 | 3.32 | 2.88 | 2.74 | 2.64 | 2.63 |
| 5.0 | 3.32 | 3.32 | 3.32 | 3.32 | 3.32 | 3.32 | 3.32 | 3.07 | 2.79 | 2.64 | 2.63 |
| 5.5 | 3.32 | 3.32 | 3.32 | 3.32 | 3.32 | 3.32 | 3.32 | 3.32 | 2.88 | 2.64 | 2.63 |

Source: Hec 22

## 9.7 MULTI-STAGE OUTLETS

A multi-stage outlet is a combination of different single outlets that "come on line" at different times based on a storage parameter, usually water elevation. Multi-stage outlets are specifically designed outlets that are designed to create different rates of outfall based on a storage facility's needs. A multi-stage outlet should be designed based on the 10, 25, 50 and 100 year storm events. The outlets can discharge to the same location or use different means of water discharge.

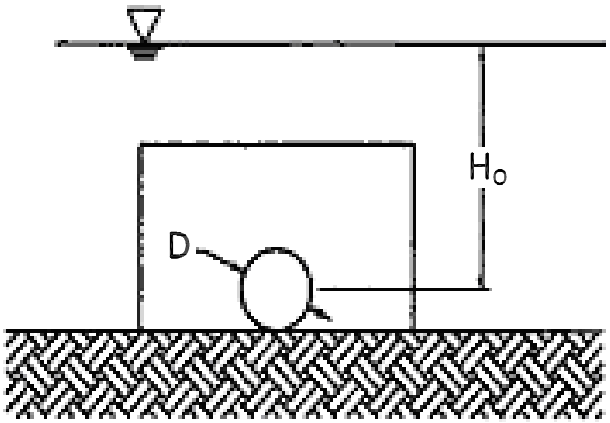


A

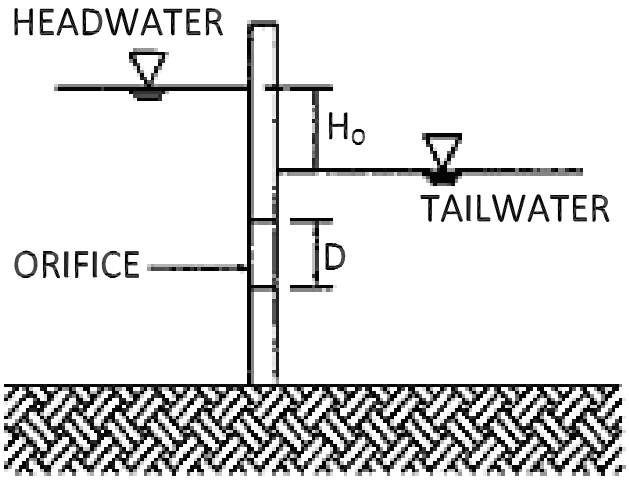


B

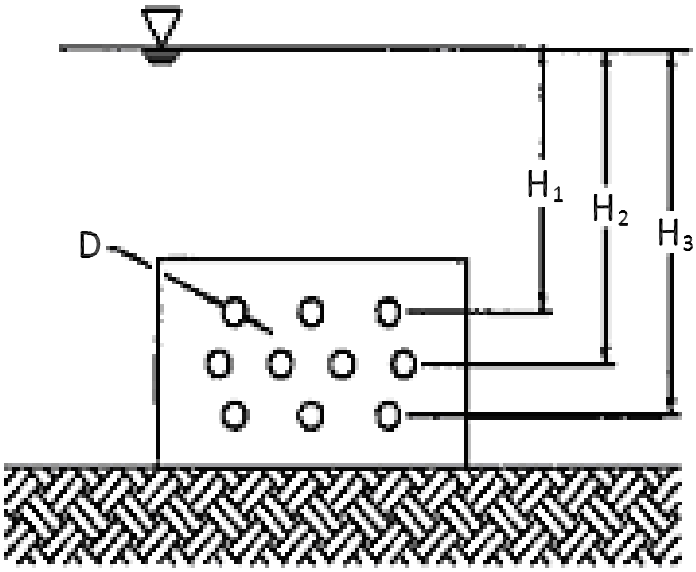


C

| | | |
|---|---|---|
| City of Highland Village | ORIFICES | FIGURE 9-1 |

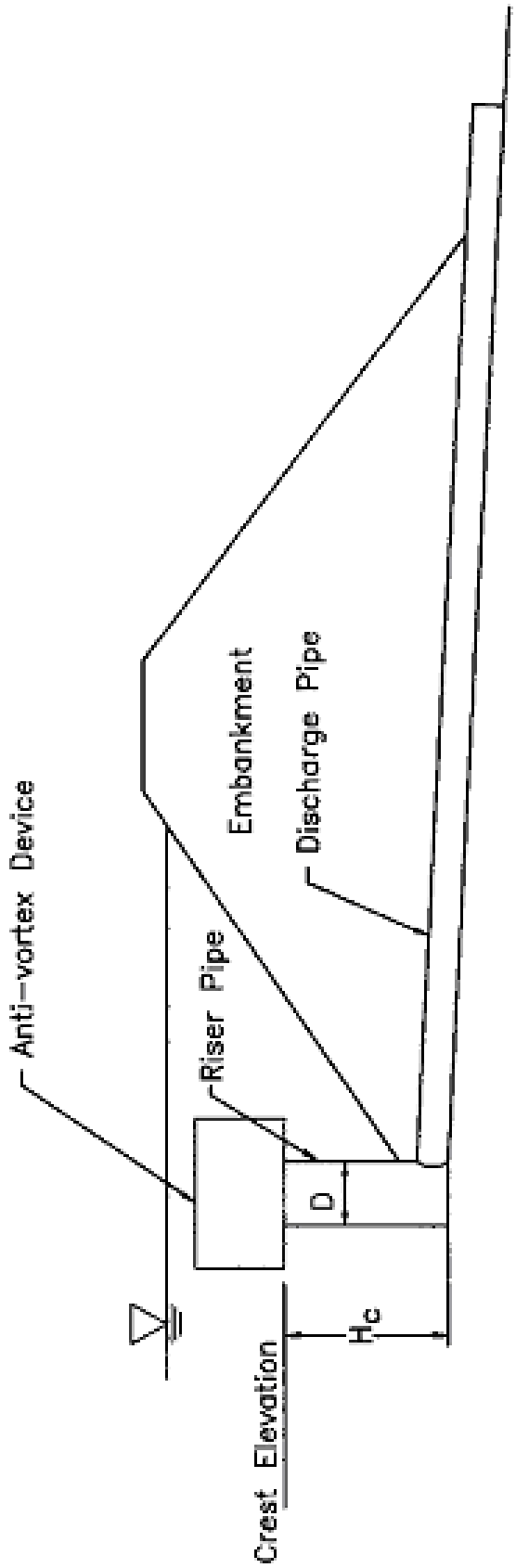


| | | |
|---|---|---|
| City of Highland Village | PERFORATED RISER | FIGURE 9-2 |

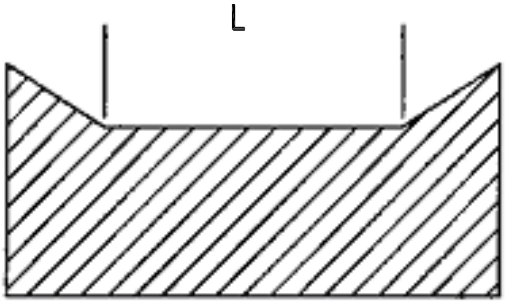


A. NO END CONTRACTIONS

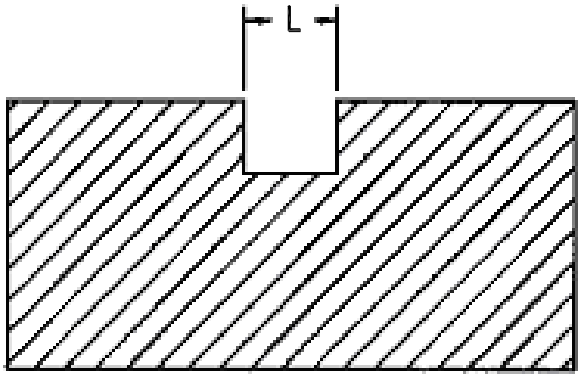


B. WITH END CONSTRICTIONS

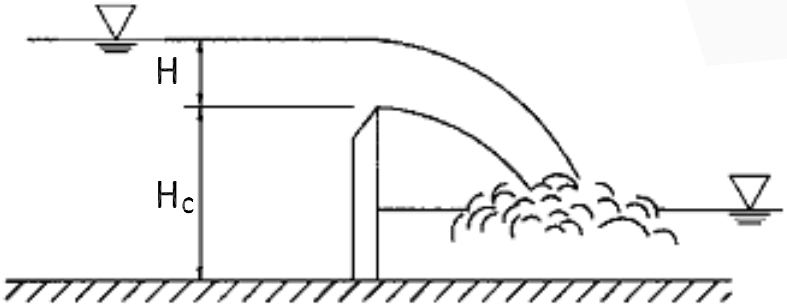


C

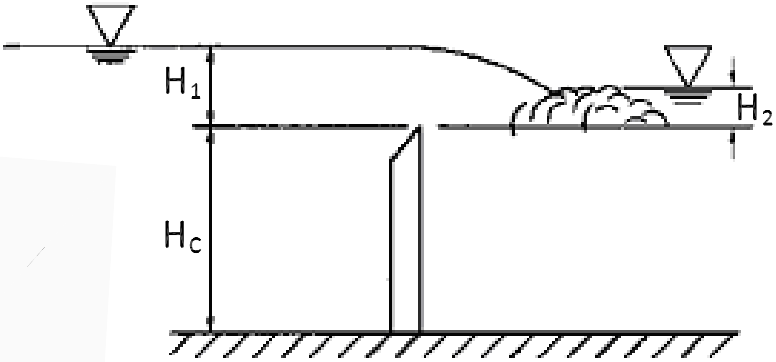


D

SHARP-CRESTED WEIRS

FIGURE 9-3

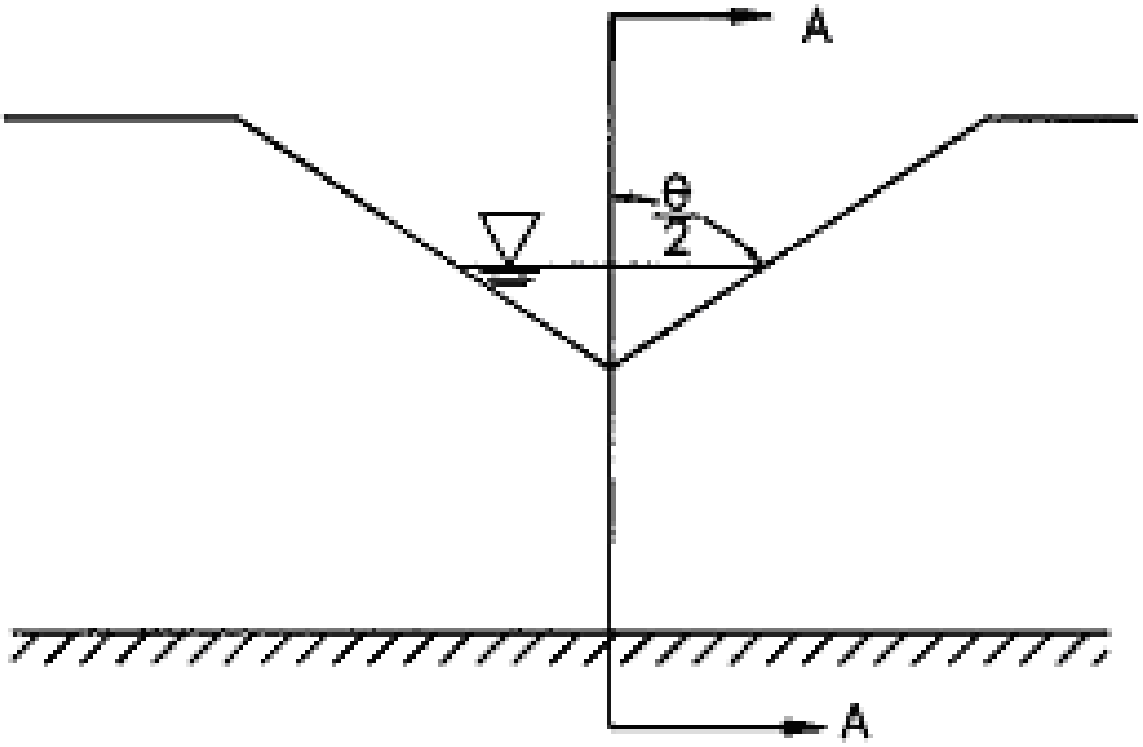


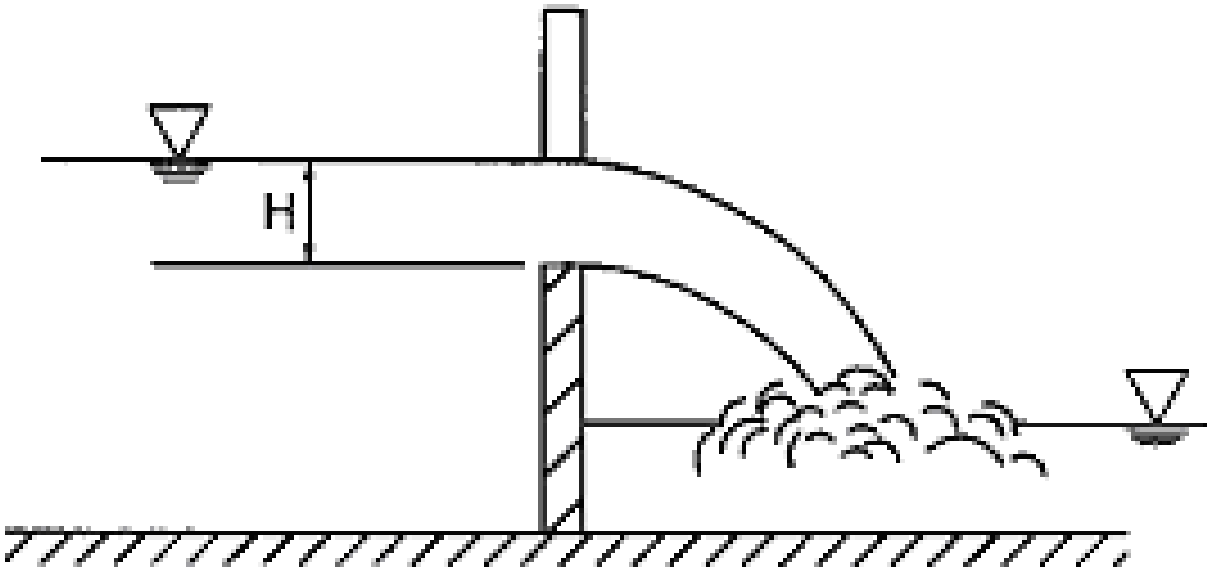


Section A–A

| | | |
|---|---|---|
| City of Highland Village | V-NOTCH WEIRS | FIGURE 9-4 |

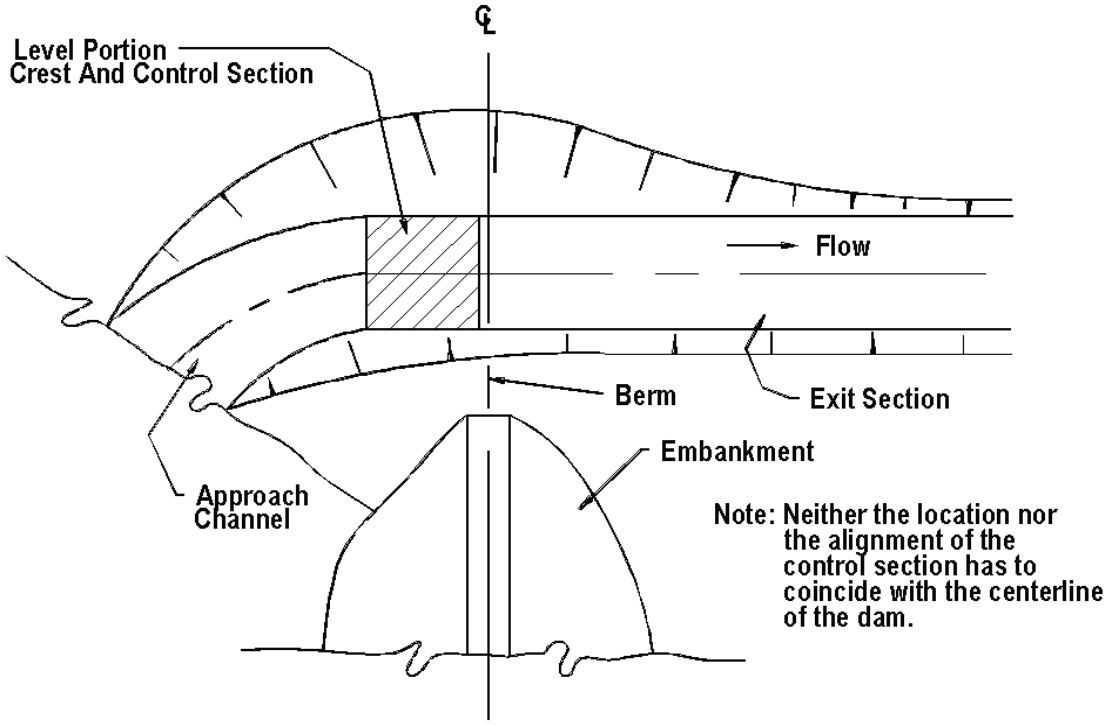


a. Plan View Of Excavated Emergency Spillway

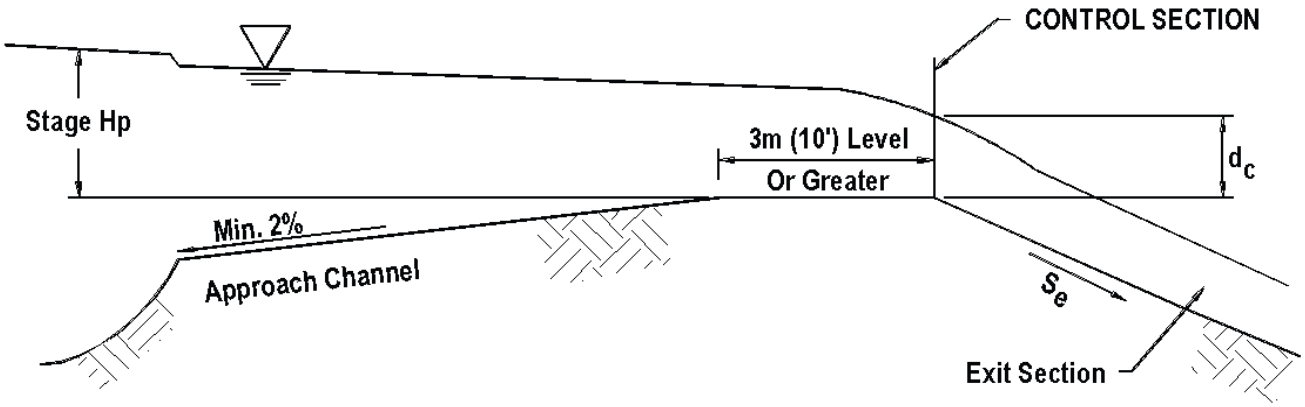


b. Profile Along Centerline

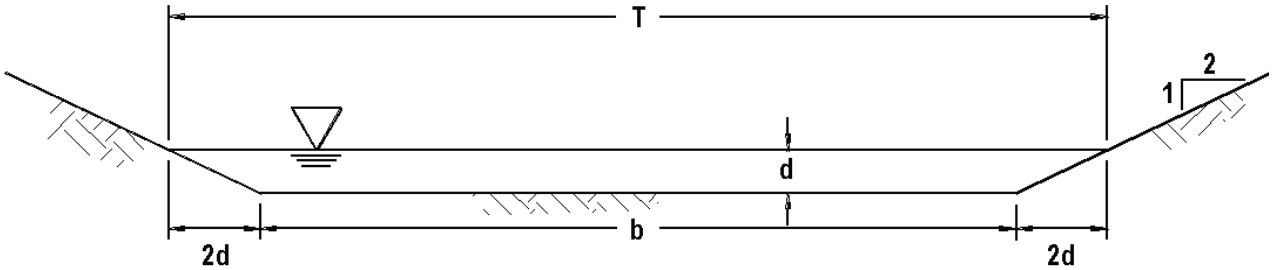


c. Cross-Section At Control Section

| | | |
|---|---|---|
| City of Highland Village | EMERGENCY SPILLWAY | FIGURE 9-5 |

# 10.0 STORM RUNOFF STORAGE

## 10.1 GENERAL

The introduction of impervious cover and improved runoff conveyance serves in many cases to increase flood peaks quite dramatically over those for existing conditions. In addition, natural drainage systems are often replaced by lined channels, storm drains, and curb-and-gutter systems. These man-made systems produce an increase in runoff volume and peak discharge. When physical, topographic and economic conditions allow, channel improvements downstream of the development are often used to prevent increased flooding. When this is not feasible, a widely used practice is runoff detention or retention storage, wherein the storm volume is held back in the watershed and released at an acceptable rate. This section presents information on storage techniques, including guidance for the design of appropriate storm runoff storage facilities. The storm runoff storage policy established for the City of Highland Village is included in Section 1.0 of this Manual. The Director of Public Works/City Engineer must be consulted concerning preferred watershed flood control strategies and alternatives.

## 10.2 STORAGE CLASSIFICATION

Storage systems may be classified as either on-line or off-line facilities. They may be designed for either detention or retention of storm water. The preferred method of storage is the retention facility. When retention facilities are not feasible due to size or impervious soil restrictions, the desired storage is the multi-stage detention facility.

### 10.2.1 Retention Storage

In a retention storage facility, runoff is captured and released only after the storm event is over and the downstream water surface has subsided. A true retention facility only releases runoff through evaporation and infiltration but for this section retention facilities also include extended detention facilities, infiltration basins, and swales. On site facilities such as parking lots and roadways using pervious pavements are also included in this section. Retention facilities may also be used for pollutant removal, recreation, water supply, groundwater recharge or aesthetics. These facilities may be located at one or more locations and be above or below ground. Retention facilities are categorized into 2 classes, Wet Pond Facilities (Figure 10-3) and Infiltration Facilities (Figure 10-4). Design criteria for both classes are listed below.

*Wet Pond Facilities*

- Wet ponds must provide sufficient depth and volume below the normal pool level

- Design must include a provision for lowering the pool elevation for cleaning purposes, shoreline maintenance and emergency operations.

- Any dike or dam must be designed with a safety factor.

- Shoreline protection shall be provided where wave action may occur.

- Safety benching should be considered at steep slopes to guard against accidental drowning.

- Facility must have sufficiently designed emergency spillway as described in Section 9.6.

*Infiltration Facilities*

- A pervious bottom is necessary to ensure that the basin will drain in a reasonable amount of time.

- Due to the potential for slow draining, the emergency spillway capacity shall be increased and/or the capacity of the basin be increased.

- A detailed engineering geological study is necessary to ensure that the facility location has sufficient infiltration as planned.

- Particulates and sediments from the inflow should be removed so that they do not settle and impede infiltration.

### 10.2.2 Detention Storage

The vast majority of flood control storage is handled by detention facilities. The purpose of detention storage is to limit the peak outflow to that which existed, from the same watershed, before development for a specific range of flood frequencies. Detention Storage may be located at one or more location in both above or below ground facilities. These facilities hold storm runoff back but release it continuously at an acceptable rate. Properly designed outlet structures are key to the functionality of the detention storage facility.

Detention facilities must have the flowing design criteria.

- Facility's outlet structure must limit the maximum outflow to allowable release rates based on the 10, 25, 50 and 100 year storm events.

- The size, shape, and depth of a detention facility must provide sufficient volume.

- An emergency overflow outlet must be provided so that the facility does not overflow, from excess inflow or an outlet becoming clogged. The emergency overflow should be located such that the overflow follows a predetermined route and follows guidance from Section 9.6.

- Access must be provided for maintenance including but not limited to the following:

    1. Inspection
    2. Sediment, debris and litter control
    3. Nuisance control
    4. Mowing
    5. Structural repairs and replacement

- If the facility is not considered to be reasonably safe, it may have to be fenced and/or signs posted.

- Facilities outlet structure must limit the maximum outflow to allowable release rates through the uses of outlets described in Section 9.0.

- System must release all excess stormwater expeditiously to ensure that the entire storage volume is available for the next storm. Additional structural design such as a paved low flow channel, may be needed to properly drain.

### 10.2.3 Multi-Stage Detention Storage

In a multi stage detention facility, storm runoff is held but is release it at different acceptable rates to control the downstream peak flow. These facilities obtain different flow rates by the use of engineered outlet structures. The multi-stage outlet structure shall be designed based on the 10, 25, 50 and 100 year storm events.

This section also includes multiple pond systems. A multiple pond system is group of closely located detention storage or retention storage facilities that hold the more frequent design storms. The pond then outfalls to each other to control the amount of discharge from the system. Figure 10-2 shows schematics of multiple pond systems.

Just like detention facilities, properly designed outlets are key to the functionality of these storage facilities. Multi-stage detention facilities must have the following design criteria.

- Multi-stage detention facilities must follow all the guidelines described in the previous section detention storage Section 10.2.2.

- Must have more then one outlet control rate through the use of a multi-stage outlet or the combination of outlets. Outlets must be designed based on the 10, 25, 50 and 100 year storm events.

- Discharge rates must be limited to an acceptable level for each design storm.

- Multi-stage detention facilities may use either multi-stage outlets or multiple outlets to create a multi-stage condition.

- Each stage of the facility must be described and total outfall calculated.

### 10.2.4 On-Line Storage and Off-Line Storage

An on-line storage facility is one is which the total storm runoff volume passes through the retention or detention facility's outflow structure.

An off line storage facility is one in which storm runoff does not begin to flow into the storage facility until the discharge in the channel reaches some critical value above which unacceptable downstream flooding will occur. An off-line facility serves to store only the high flow rate portions of the flood event.

## 10.3 DESIGN PROCEDURES

The design process for a stormwater runoff detention facility generally proceeds as described below. Runoff detention and retention facilities shall be designed for the 10 year, 25 year, 50 year and 100 year design storms.

When storm water management first became common, most detention/retention facilities were designed to control runoff from only a single storm frequency. Typically the 100-year storms were selected as the controlling criteria. When using an older runoff storage facility, it may be necessary to redesign the facilities discharge rate to conform to the 10 year, 25 year, 50 year and 100 year design storms.

### 10.3.1 Hydrologic Design

1. Inflow Hydrograph - The design inflow hydrograph for the 100-year storm event must be determined by an appropriate hydrologic methodology. A discussion of the proper procedure for determination of a design inflow hydrograph can be found in Section 2.0 of this Manual.

2. Allowable Release Rate - The maximum allowable release rate from the detention facility must be determined. The outflow structure for a storage facility shall be sized such that the allowable release rate shall be limited to the 10 year, 25 year, 50 year and 100 year design storm discharges based on existing conditions. The outflow structure capacity shall be determined using the methodologies discussed in Section 8.0 of this Manual. For multi-stage storage, release rates should be based on an acceptable design storm discharge rates and proper multi-stage outlets designed.

### 10.3.2 Hydraulic Design

1. Preliminary Pond Sizing - A preliminary sizing of the detention facility can be carried out graphically as shown in Figure 10-1. A straight line is drawn from the origin to the maximum allowable outflow on the recession limb of the hydrograph. The runoff volume depicted between the plotted hydrograph and the straight line approximates the necessary storage.

2. Preliminary Outflow Structure Sizing - The outflow structure may be sized preliminarily as follows:
   a. Determine the maximum allowable water surface elevation in the pond for the 10 year, 25 year, 50 year and 100 year frequency inflow hydrograph.
   b. Estimate the flow line elevation for the outflow structure at the outlet.
   c. Estimate the size of the structure required to pass the allowable outflow rate based on a headwater elevation at the 10 year, 25 year, 50 year and 100 year water level in the pond. Estimate a tailwater elevation at the estimated flow elevation in the outflow channel.
   d. Estimate the size of the overflow spillway required to pass the extreme storm event.

e. For multi-stage outflows, calculate each desired outflow separately. Once a desired outflow rate has been found size each outflow accordingly. The total discharge of the outflow is equal to the sum of each design outflow that is active.

3. Design Tailwater Depth - In order to route the inflow hydrograph through the detention facility, a relationship must be established between the volume of storage in the pond and the corresponding amount of discharge through the outflow structure. In cases of outlet-controlled flow, this relationship is directly dependent on the elevation of the tailwater at the outlet of the outflow structure.

   For the purpose of establishing an outflow rating curve under outlet-control conditions, the design engineer must make a judgment as to what will be the proper tail-water level for use in calculating the storage-discharge relationship.

   In general, it should be noted that an unreasonably high choice for the tail-water depth will result in an oversized outflow structure, and thus minimize attenuation of the peak outflow, especially for smaller storm events. An unreasonably low choice for the tail-water depth will result in an undersized outlet structure and the risk that the pond will be overtopped during the design storm event. The City Engineer shall be consulted as to preferred policy at the site of interest.

4. Final Sizing of Pond Storage and Outflow Structure - The inflow hydrograph should then be routed through the trial pond configuration (preferably using the Modified Puls routing option in HEC-RMS). A comparison can be made between the maximum discharge and the maximum allowable discharge. At this juncture, adjustments can be made in the pond as storage and/or outflow structure in order to insure that the maximum discharge is not exceeded. Several routing iterations will probably be required for determination of the optimal storage volume and outflow structure.

   Detention or retention facilities shall be sized such that at least 1 foot of freeboard shall be maintained during each design storm.

   Retention facilities require knowledge of soil permeability and hydrogeologic conditions in the vicinity of the basin. Although infiltration rates can be found in the county soil reports it is advised that good field measurements be made to provide better estimates for these parameters.

5. Storm Sewer Hydraulic Gradients - The hydraulic gradients in storm sewers shall be determined using procedures outlined in Section 5.0 of this Manual. When storm sewers outlet into a detention facility, the starting water surface elevation for these calculations shall be the 100-year water level in the pond.

   In order to determine the flood levels in the detention facility, each design storm inflow hydrograph is routed through the pond. It is recommended that the design storms maximum water level in the main channel be used as the constant value of the tail-water elevation for determining the outflow structure rating curve for the design storm.

6. Allowances for Extreme Storm Events - Design consideration must be given to storm events in excess of the 100-year design storm. An emergency spillway, overflow structure or swale must be provided as necessary to effectively handle the extreme storm event. In places where a dam has been utilized to provide detention directly in the channel, due consideration must be given to the consequences of a failure, and if a significant hazard exists, the dam must be adequately designed to prevent such hazards.

   Detention facilities which measure greater than 6 feet in height are subject to 31 Texas Administrative Code (TAC) Chapter 299 (Subchapters A through E), and all subsequent changes. The height of a detention facility or dam is defined as the distance from the lowest point on the crest of the dam (or embankment), excluding spillways, to the lowest elevation on the centerline or downstream toe of the dam (or embankment), including the natural stream channel. Subchapters A through E of Chapter 299 classify dam sizes and hazard potential, and specify required failure analyses and spillway design flood criteria.

7. Erosion Control - The erosional tendencies associated with an open channel are similar to those found in a detention pond. For this reason, the same types of erosion protection are necessary, including proper revegetation and pond surface lining where necessary. Proper protection must be provided at pipe outfalls into the facility, pond outlet structures and overflow spillways where excessive turbulence and velocities will cause erosion.

## 10.4 GENERAL REQUIREMENTS FOR DETENTION POND CONSTRUCTION

The structural design of detention facilities is very similar to the design of open channels. For this reason, all requirements from Section 7.0 pertaining to the design of lined or un-lined channels shall also apply to lined or unlined detention facilities.

### 10.4.1 Pilot Channels

Construction of a pilot channel is required to facilitate complete drainage of the detention facility. The pilot channel shall meet the following specifications:

1. Unlined pilot channels shall be 2 feet deep at a minimum, have a minimum invert slope of 0.01 foot/foot and have maximum side slopes of 3:1.

2. Concrete pilot channels shall have a minimum depth of 2 inches and a minimum invert slope of 0.005 foot/foot.

3. The floor of the detention facility shall be graded toward the pilot channel at a minimum slope of 0.005 foot/foot and at a recommended slope of 0.01 foot/foot.

### 10.4.2 Outlet Structure

Significant erosion protection at the outlet structure is required due to extreme headwater conditions and the erosive velocities which are typically present. The following erosion protection measures shall be required at the outlet structure:

1. Pipes, culverts and conduits shall be carefully constructed with sufficient compaction of the backfill. A geotechnical analysis shall be provided to support the proposed back fill requirements.

2. Reinforced concrete pipe used in the outlet structure shall conform to ASTM C96 Class III, with compression-type rubber gasket joints conforming to ASTM C443.

3. The use of pressure grouting around the outlet conduit should be considered where soil types or conditions may prevent satisfactory backfill compaction. Pressure grouting should also be used where headwater depths could cause backfill to wash out around the pipe.

4. All weirs and orifices must be properly anchored to ensure no movement during high flow.

5. Additional structures are required for any flow line elevation drop 4 feet or greater.

## 10.5 GEOTECHNICAL INVESTIGATION

A geotechnical investigation shall be provided for at the proposed detention facility site to ensure proper design. A geotechnical report shall be submitted to the City Engineer and should address the following:

a. pond side slope stability
b. suitability of excavated material for use as fill
c. groundwater elevation
d potential for seepage through the dam and requirements for seepage control
e. dam stability
f. effect on stability of adjacent structures and required control measures

## 10.6 REQUIRED ANALYSES

The engineer shall be required to submit a summary of the technical calculations used in the design of any storm water storage facility. This shall include at a minimum:

1. Hydrologic calculations of each design storm for existing and future condition flows.

2. A summary table delineating existing discharge, proposed discharge and post-detention discharge for each storage facility and/or multi-stage detention facility.

3. Routing calculations for the 10 year, 25 year, 50 year and 100 year inflow hydrograph through the retention facility and/or multi-stage detention facility.

4. Calculations used to determine outflow structure rating curves.

5. Geotechnical Report as delineated in Section 10.5.

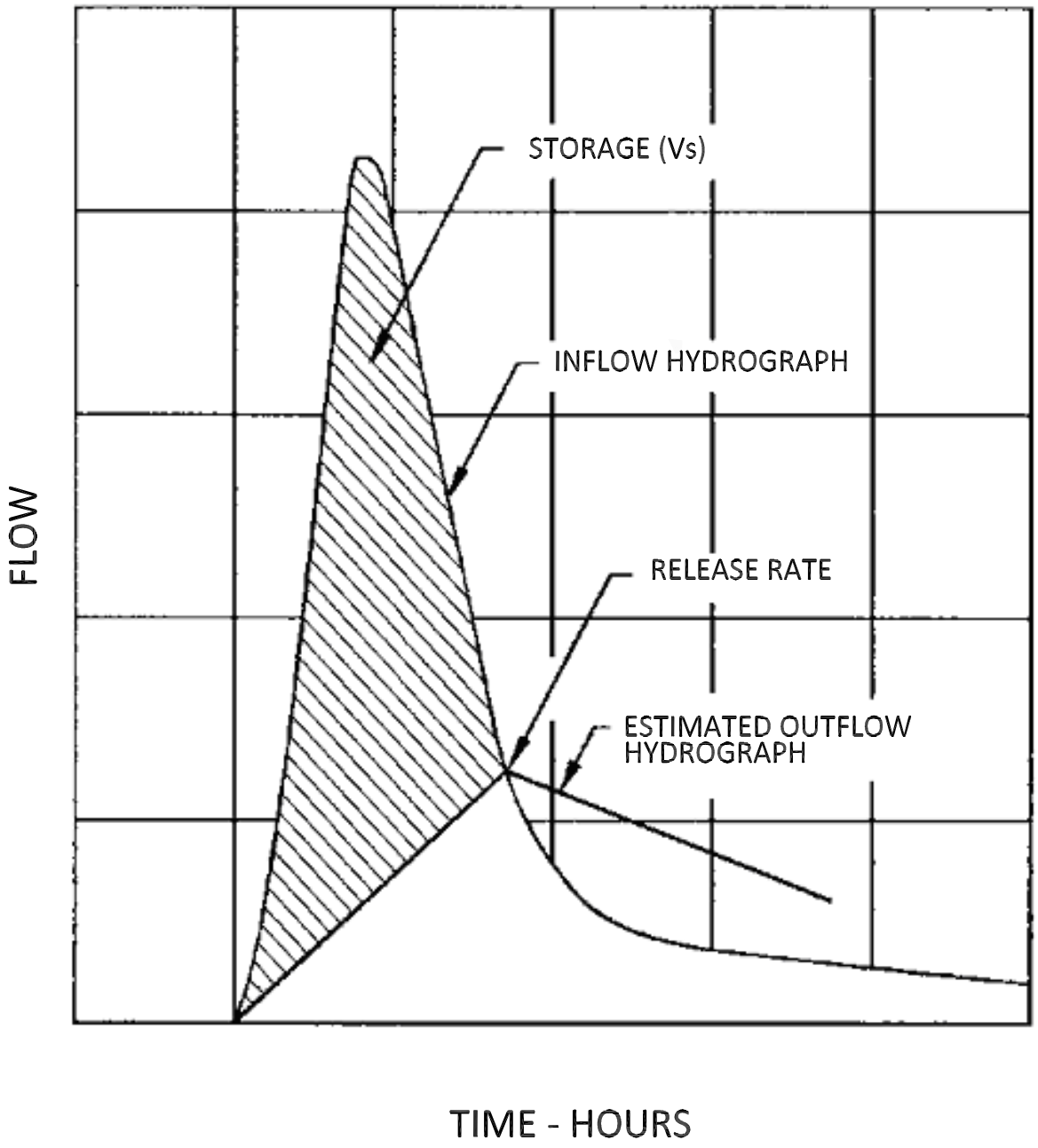


| | | |
|---|---|---|
| City of Highland Village | PRELIMINARY POND SIZING | FIGURE 10-1 |

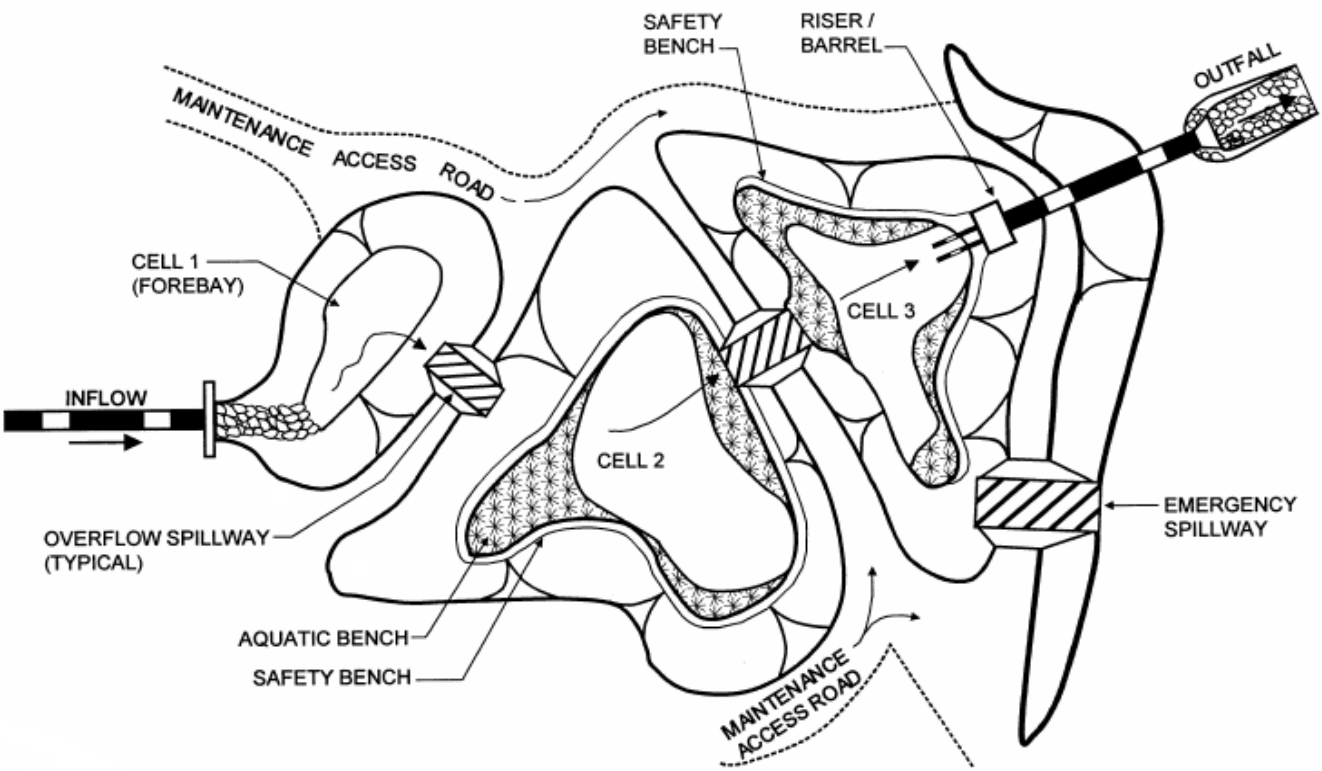


PLAN VIEW

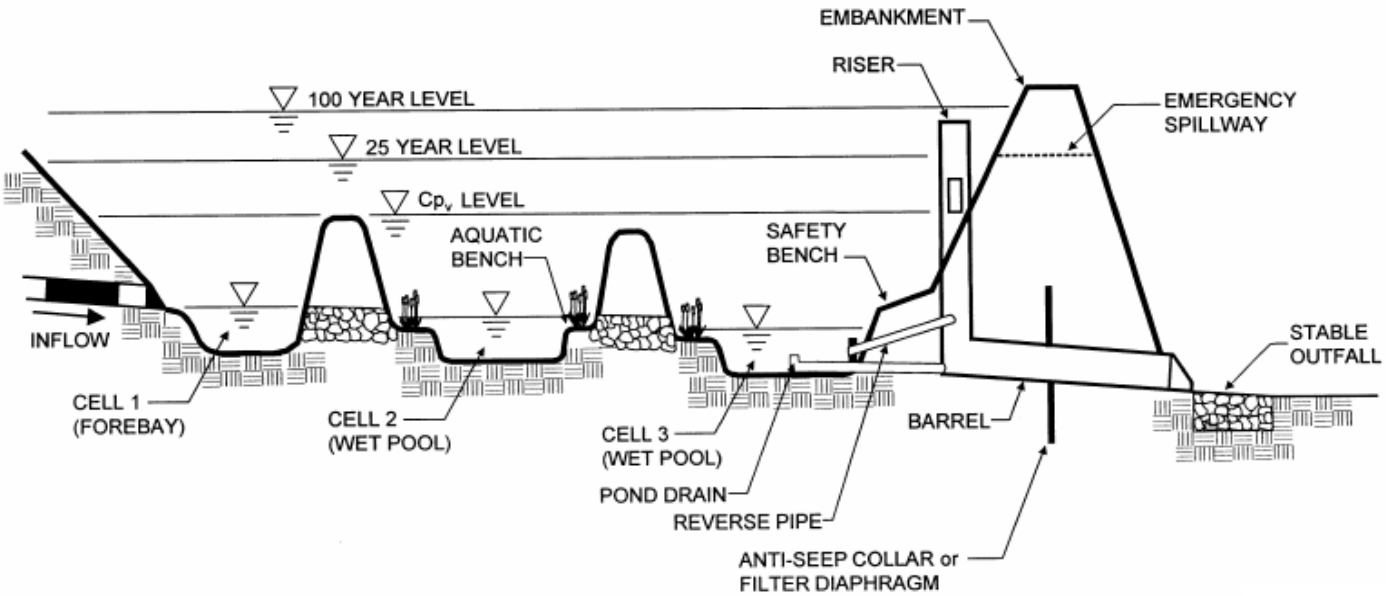


PROFILE

| | | |
|---|---|---|
| City of Highland Village | MULTI-STAGE POND SYSTEM | FIGURE 10-2 |

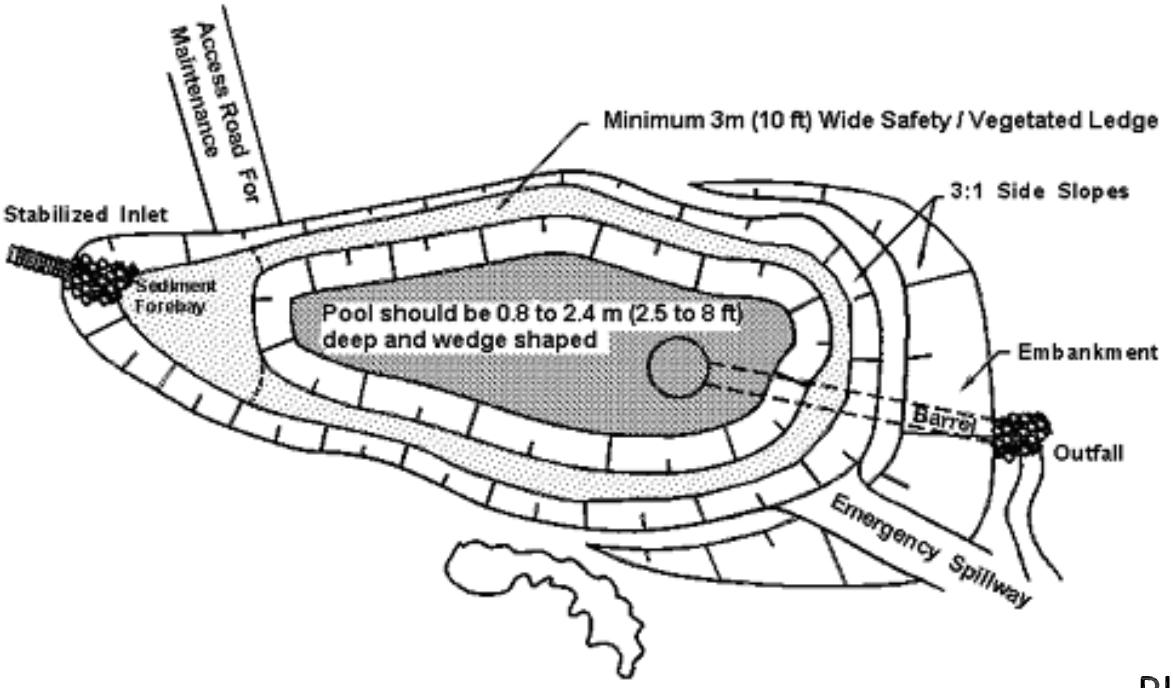


PLAN VIEW

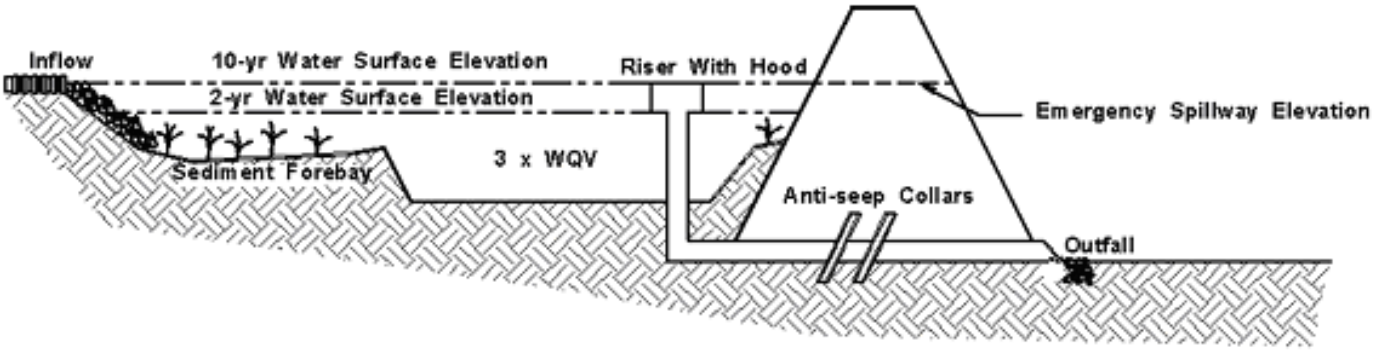


PROFILE

| | | |
|---|---|---|
| City of Highland Village | TYPICAL WET POND | FIGURE 10-3 |

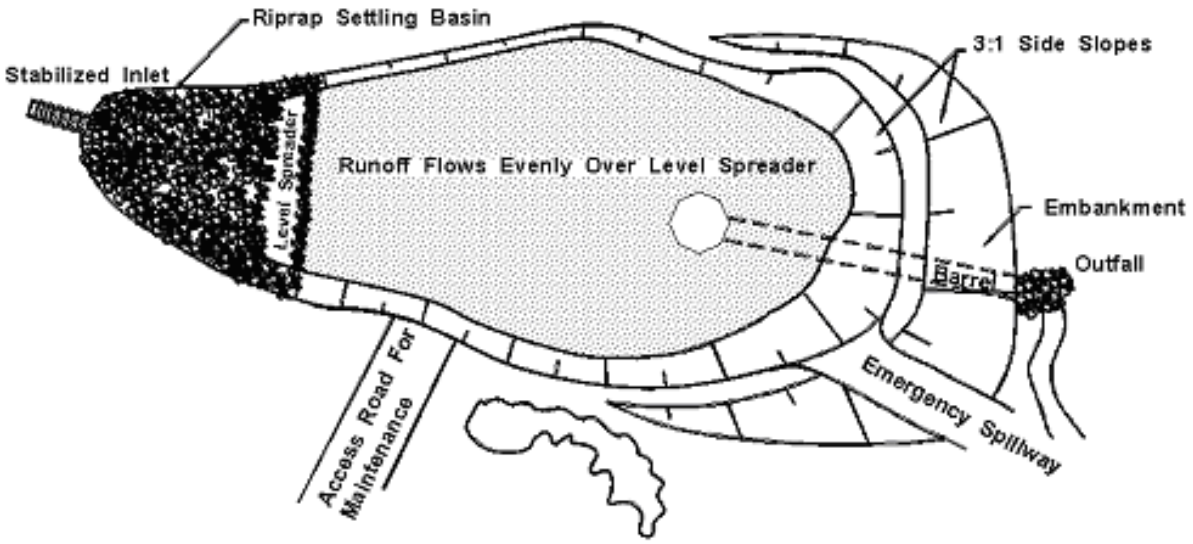


PLAN VIEW

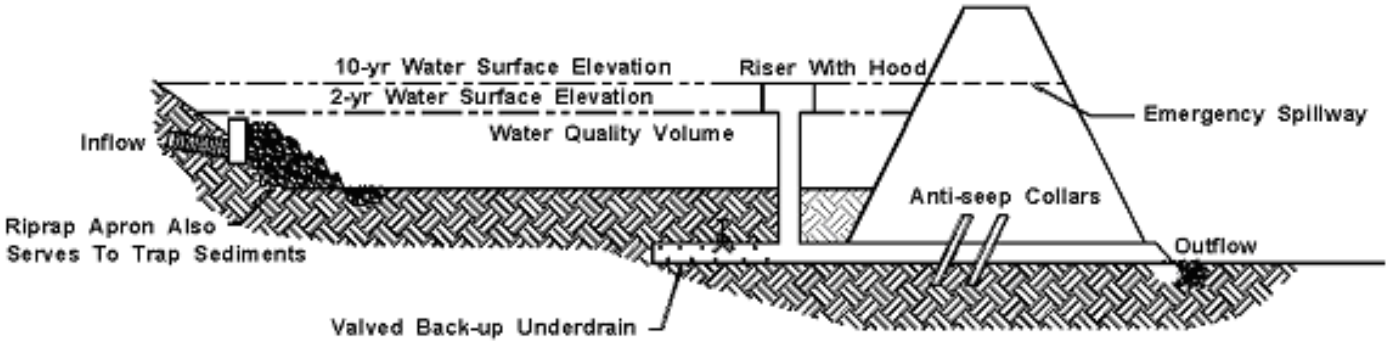


PROFILE

| | | |
|---|---|---|
| City of Highland Village | TYPICAL INFILTRATION BASIN | FIGURE 10-4 |

## 11.0 CONSTRUCTION PLAN PREPARATION

### 11.1 GENERAL

The criteria and procedures outlined in this section provide a general guide to engineers who prepare construction plans for drainage projects in the City of Highland Village. Engineers are encouraged to meet with the Director of Public Works/City Engineer at the project concept.

### 11.2 PRELIMINARY PLANS

It is recommended that a preliminary plan be completed in sufficient detail to allow review by the City Engineer and to determine the problems which must be addressed during the final design. To complete this phase, topographic information is required to establish the general drainage patterns that impact the project. Topographic information may be obtained from on the ground field surveys, by aerial photogrammetric methods, by the use of the topographic maps available at the City of Highland Village or from a combination of these sources.

Based upon the design criteria and procedures outlined in this manual, a preliminary layout of the existing and proposed facilities shall be prepared, including drainage areas, inlets, storm sewers and channels. The engineer shall review this plan with particular regard to the avoidance of utility conflicts where possible, and to establish the project requirements for easements or rights-of-way.

### 11.3 FINAL PLANS

During the final design phase, construction plans shall be plotted on 22”x34”. In addition to construction plans being submitted as a hard copy a digital copy shall also be provided. Complete drainage calculations shall be provided with the construction plans in accordance with the minimum requirements provided in this manual. Following approval of the construction plans by the Director of Public Works/City Engineer, the design engineer shall provide the City of Highland Village with five sets of plans.

The Director of Public Works/City Engineer will provide comments following a review of the construction plans and calculations; the engineer shall address these review comments and resubmit the plans to the City Engineer. All grades, elevations, pipe sizes, utility locations, items and quantities should be checked and each plan/profile sheet should have a benchmark shown. Construction plans for drainage improvements shall include the following plan sheets:

- Drainage Area Map –A suitable scale should be selected for the drainage area map to clearly show the onsite and offsite drainage areas which contribute to the project. In general, a map having a scale of 1" = 200' is suitable unless the overall drainage area is large. For large drainage areas a scale of 1" = 2000' is usually sufficient. For large drainage areas it also may be necessary to provide a separate drainage area map for the onsite and offsite drainage areas.

  The drainage area map shall including the following information:
  - Existing zoning or land use designations;
  - Existing contours with a contour interval no greater than 5 feet;
  - Delineation of all drainage areas and subareas;
  - Flow arrows which clearly indicate the direction of flows within all drainage areas and subareas including crest, sags and street intersections;
  - Indication of each drainage area and subarea of the code identification number, the coefficient of runoff, the size of the area or subarea, the rainfall intensity and the design storm runoff;
  - If multi-stage pond, provide information for each storm event;
  - Existing and proposed inlets, storm sewers, culverts, and natural and manmade drainage ways; and
  - Complete cumulative runoff calculations which have been prepared for the storm sewer system.

Plan/profile sheets for storm sewer improvements shall be prepared at a minimum scale of 1" = 40' horizontal and 1" = 4' vertical, unless otherwise approved by the City Engineer. The storm sewer plan view shall include the following information:

- All existing and proposed inlets, storm sewers, culverts, and natural and manmade drainage ways;
- All existing utilities;
- Inlet designations corresponding to the area or subarea contributing runoff to the inlet, shown opposite the inlet;
- For each inlet, the paving or storm sewer stationing at the inlet centerline, the size of inlet, type of inlet, top of curb elevation and inlet flow line;

- The amount of runoff collected and carried over at all inlets along with the direction of flow; for each storm sewer or culverts, the pipe designation, the pipe size and length, and stationing at 100-foot intervals;
- Stationing for each sheet, beginning and ending with even 100-foot or 50-foot stationing;
- Curve date for all storm sewers and culverts; and
- Property lines and easements along the storm sewer, with dimensions.

The storm sewer profile shall include the following information:

- Existing and proposed ground profiles along the centerline of the proposed storm sewer or culvert;
- The proposed storm sewer along with the pipe size, the pipe gradient and the type of pipe;
- The hydraulic gradient of the proposed storm sewer;
- Hydraulic calculations for each length of storm sewer, including the pipe diameter, discharge in cfs, pipe capacity in cfs, friction slope in percent, velocity in fps and the head loss at each interception point;
- Elevations of the flow line of the proposed storm sewer at 100-foot intervals;
- Stationing and flow line elevations at all pipe size changes, grade changes, lateral connections, manholes and pipe connections;
- A profile of the storm sewer outfalls, including the water surface elevation at the outfall;
- Lateral profiles where utilities are crossed; and
- All existing utilities, including the clearance with the proposed storm sewer.

# APPENDIX A

## GLOSSARY OF TERMS

# GLOSSARY OF TERMS

| | |
|---|---|
| Backwater | Water backed up in its course by an obstruction, an opposing current or by a larger body of water. |
| Crest | The surface on a dam or weir over which water is designed to spill. |
| Critical Flow | A state of flow characterized by minimum specific energy (depth + vel.$^2$/2g) and instability of depth. At critical flow, the velocity is equal to $(g/depth)^{1/2}$. |
| Critical Depth | The depth at which critical flow occurs. |
| Detention | The process of capturing storm water runoff in a storage facility such as a pond or dammed-off section of channel while continuously releasing it from the facility at an acceptable rate through a flow-limiting outflow structure. The purpose of detention storage is to lessen peak flows downstream by controlling peak outflows at the detention site. |
| Flood Routing | The process for determining how the characteristics of a flood hydrograph change as it passes downstream through a channel or detention facility. |
| Floodplain | The portion of land area in and around a watercourse which becomes submerged, generally by water overflowing the stream banks, during a particular storm event. For example, the 100-year floodplain is defined as the land area which becomes submerged by stream flow during a 100 year frequency rainfall event. |

| | |
|---|---|
| Floodway | The natural floodway is the channel of a watercourse and those portions of the adjoining floodplain which are reasonably required to carry and discharge the floodwaters of a selected probability-of-occurrence flood.<br><br>The designated floodway is the channel of a watercourse and that portion of the adjoining floodplain required to provide for the passage of a selected flood with an insignificant increase in flood stage above that of natural conditions. Normally, the 100-year flood (one that has a 1% chance of occurrence in any given year) should be considered as the selected flood. An "insignificant increase" is established by State or local regulation. |
| Freeboard | The vertical distance between the design water surface level in an open channel and the top of the channel bank. |
| Head Loss | The "head" is a measure of the energy stored at a given point in a body of water. Therefore, head loss is a measure of the energy loss which may occur between two points in space. "Head Loss" is generally used in the context of energy lost in a flow regime due to turbulence, friction, construction or expansion of the flow. |
| Hydrograph | A graphical depiction of the change in the rate of flow over time at a given point on a watercourse. The hydrograph is generally presented with time plotted on the x-axis versus flow rate plotted on the y-axis. |
| Hyetograph | A graphical depiction of rainfall intensity plotted versus time. Often, the rainfall intensity is assumed to be constant during each in a series of discretely defined time intervals. |
| Impervious Cover | Land cover, such as pavement or concrete, which does not allow the entrance or passage of water. |
| Open Channel | A watercourse where one water surface is exposed to atmospheric pressure. |
| Rainfall Intensity | The rate of rainfall. Rainfall intensity is generally measured in inches of rainfall per hour. |

| | |
|---|---|
| Retention | The process of capturing stormwater runoff in a storage facility. Retention differs from detention in that the stored runoff is not released until after the storm event has concluded and streamflows have subsided. |
| Special Flood Hazard Area | The land in a floodplain within a community subject to a 1% or greater chance of flooding in any given year. |
| Storm Duration | The length of time over which rainfall occurs in a given storm event. |
| Storm Frequency | The measurement of the magnitude of the rainfall in a given storm event presented in terms of the average interval of recurrence of such a storm. For example, a storm event of 100-year frequency is one of such magnitude that the average. Recurrence interval is 100 years. IN other words, the 100-year storm event has a 1% chance of occurring in the next year. |
| Soffit | The top of the inside of a pipe or other enclosed conduit. |
| Tailwater | The water ( or the elevation of the water surface) at a channel or conduit outfall. |
| Time of Concentration | The time it takes from the start of the rainfall for runoff to contribute at the design point from all points in a watershed. |
| Uniform Flow | Open channel flow in which the depth is not changing from one pont to the next. |
| Warped Headwall | A headwall (wingwall) which transitions smoothly from some degree of side slope to vertical at the culvert inlet or outfall. |
| Watershed | For a given point on a watercourse, the area of land which contributes runoff to that point. |

# APPENDIX B

## CHECK LIST FOR STORM DRAINAGE PLANS

APPENDIX B

CHECK LIST FOR STORM DRAINAE PLANS

A. DRAINAGE AREA MAP

1. Use scales for on site and off site drainage areas which are adequate for review.
2. Show existing and proposed storm sewers and inlets.
3. Indicate sub areas for each alley, street and off site.
4. Indicate contours on map for on and off site.
5. Use design criteria as shown in the Drainage Criteria Manual.
6. Indicate zoning on drainage area.
7. Show points of concentration.
8. Indicate runoff at all inlets, dead end streets and alleys or to adjacent property.
9. Provide runoff calculations for all areas showing acreage, runoff coefficient, inlet time, and storm frequency.
10. For cumulative runoff, show calculations.
11. Indicate all crests, sags and street and alley intersections with flow arrows.

B. STORM SEWERS

1. Show plan and profile of all storm sewers.
2. Indicate concrete cushion notation where applicable.
3. Specify Class III pipe unless otherwise noted.
4. Provide inlets where street capacity is exceeded. Provide inlets where alley runoff exceeds intersecting street capacity.
5. Show dimensions for all drainage easements.
6. Show all existing utilities in plan and profile of storm sewers.
7. Indicate existing and proposed ground line and improvements on all storm sewer profiles.
8. Show hydraulic computations for all storm sewers and channels.
9. Show laterals on trunk profile with stations.
10. Indicate size of inlet on plan view, lateral size and flow line, paving station and top of curb elevation
11. Indicate runoff concentrating at all inlets and direction of flow. Show runoff far all stub out pipes and intakes.
12. Show future streets and grades where applicable.
13. Do not use 90 degree turns on storm sewers or outfall.
14. Discharge storm sewers at the flow line of creeks and channels with the last 10 feet at a grade not to exceed one percent.
15. Show water surface at outfall of storm sewer.

16. Where fill is proposed in creeks or outfall ditches, specify compacted fill.
17. Use type “Y” or special “Y” inlets in ditches.
18. Where connections are made to existing storm sewer, shown computations for existing system.
19. Show pipe sizes in plan and profile
20. Provide separate plan and profile of storm sewers; do not include on paving p\p plans.
21. Use heavier pipes where crossing railroads or in deep fill.
22. Show details of all connection boxes, flumes or any other item not a standard detail.
23. Provide lateral profiles where existing or proposed utilities are crossed and show all utilities in profile.
24. Provide headwalls for all storm sewers at outfall.
25. Provide a minimum separation of 2 feet between top of inlet and beginning lateral hydraulic gradient on normal length laterals such as street and alley.
26. Use standard curb inlets in streets and alleys. Use recessed inlets in divided streets. Do not use grate or curb and grate inlet unless no other solution is available.
27. Indicate flow line elevations of storm sewers on profile, shown percent grade. Match top inside of pipes at change in pipe sizes.
28. Where laterals tie into trunk line, channel or creek, place at 60 degree angle with center lines. Connect them so that the longitudinal centers intersect.
29. Show curve data for all storm sewers.
30. Specify concrete strength for all structures.
31. Do not use high velocities in storm sewer design. A maximum velocity of 10 fps at the outfall is recommended.

C. CREEKS AND CHANNELS

1. Show stationing in plan and profile.
2. Indicate flow line, banks, design water surface. Show hydraulic computations.
3. Provide cross-sections with ties to property lines and easements.
4. Specify erosion control measures where fill is provided or cut made on sections.
5. Provide a maximum side slop of 3 (H) :1(V) slope for fill from street property line or rear lot line to flow line of creek. Slope of any excavated area in channel shall not exceed 4:1.
6. Specify compacted fill where fill is proposed.
7. Do not use velocities greater than original stream velocities.

8. Where natural creek is to be altered or filled, a standard city policy for filling in flood plain will be followed.
9. Indicate adjacent alley or street elevations on creek profile.

# APPENDIX C

## BEST MANAGEMENT PRACTICE DETAILS

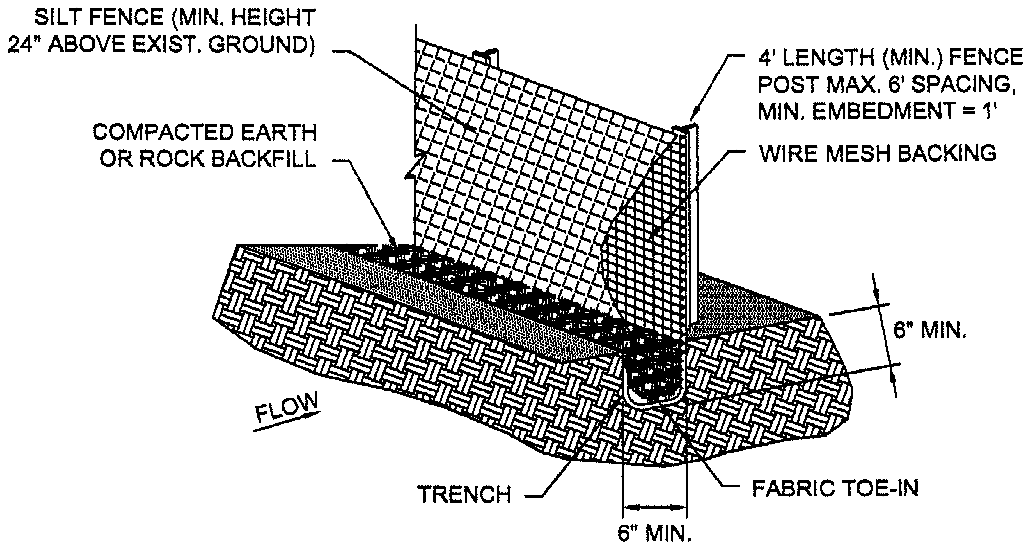


SILT FENCE

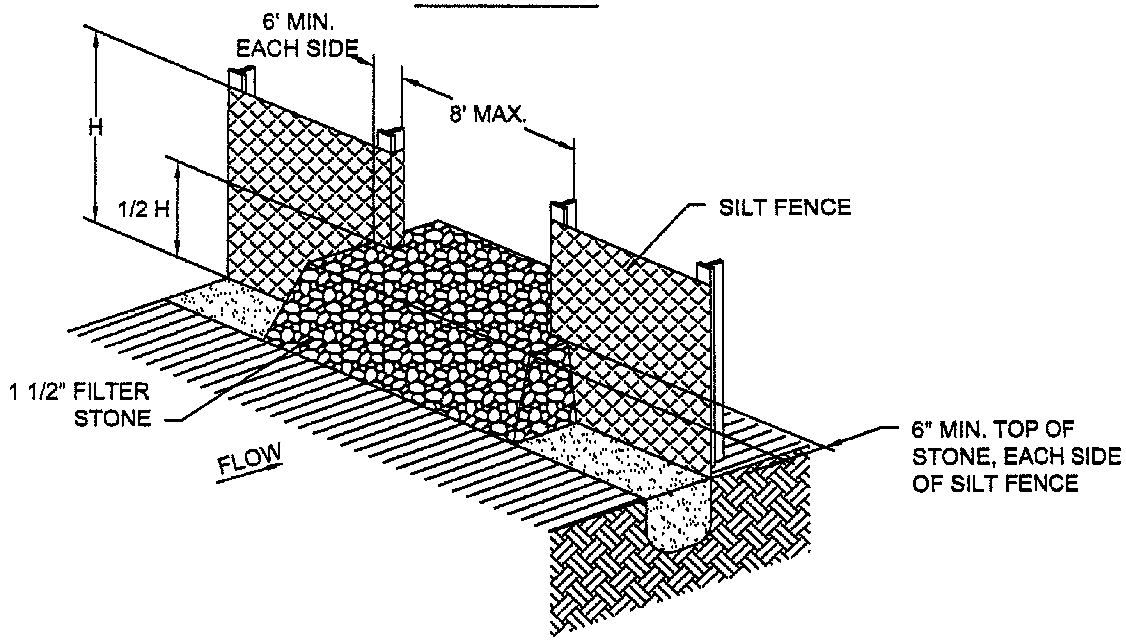


STONE OVERFLOW STRUCTURE

| SILT FENCE | North Central Texas Council of Governments | STANDARD SPECIFICATION REFERENCE 201.5 | |
|---|---|---|---|
| | | DATE OCT. '04 | STANDARD DRAWING NO. 1020A |

| | | |
|---|---|---|
| City of Highland Village | NCTCOG STANDARD DETAILS FOR SILT FENCE | FIGURE C-1 |

SILT FENCE GENERAL NOTES:

1. POSTS WHICH SUPPORT THE SILT FENCE SHALL BE INSTALLED ON A SLIGHT ANGLE TOWARD THE ANTICIPATED RUNOFF SOURCE. POST MUST BE EMBEDDED A MINIMUM OF ONE FOOT.

2. THE TOE OF THE SILT FENCE SHALL BE TRENCHED IN WITH A SPADE OR MECHANICAL TRENCHER, SO THAT THE DOWNSLOPE FACE OF THE TRENCH IS FLAT AND PERPENDICULAR TO THE LINE OF FLOW. WHERE FENCE CANNOT BE TRENCHED IN (e.g. PAVEMENT), WEIGHT FABRIC FLAP WITH ROCK ON UPHILL SIDE TO PREVENT FLOW FROM SEEPING UNDER FENCE.

3. THE TRENCH MUST BE A MINIMUM OF 6 INCHES DEEP AND 6 INCHES WIDE TO ALLOW FOR THE SILT FENCE FABRIC TO BE LAID IN THE GROUND AND BACKFILLED WITH COMPACTED MATERIAL.

4. SILT FENCE SHOULD BE SECURELY FASTENED TO EACH SUPPORT POST OR TO WIRE BACKING, WHICH IN TURN IS ATTACHED TO THE FENCE POST. THERE SHALL BE A 3 FOOT OVERLAP, SECURELY FASTENED WHERE ENDS OF FABRIC MEET.

5. INSPECTION SHALL BE AS SPECIFIED IN THE SWPPP. REPAIR OR REPLACEMENT SHALL BE MADE PROMPTLY AS NEEDED.

6. SILT FENCE SHALL BE REMOVED WHEN FINAL STABILIZATION IS ACHIEVED OR ANOTHER EROSION OR SEDIMENT CONTROL DEVICE IS EMPLOYED.

7. ACCUMULATED SILT SHALL BE REMOVED WHEN IT REACHES A DEPTH OF HALF THE HEIGHT OF THE FENCE. THE SILT SHALL BE DISPOSED OF AT AN APPROVED SITE AND IN SUCH A MANNER AS TO NOT CONTRIBUTE TO ADDITIONAL SILTATION.

| SILT FENCE | North Central Texas Council of Governments | STANDARD SPECIFICATION REFERENCE 201.5 | |
|---|---|---|---|
| | | DATE OCT. '04 | STANDARD DRAWING NO. 1020B |

| | | |
|---|---|---|
| City of Highland Village | NCTCOG GENERAL NOTES FOR SILT FENCE | FIGURE C-2 |

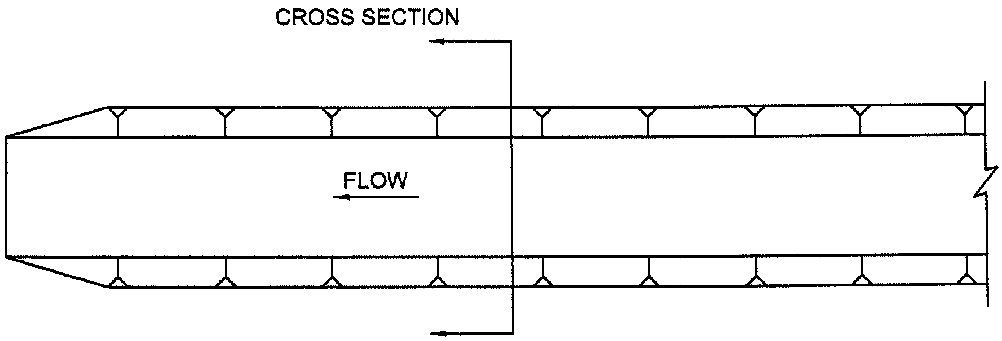


PLAN VIEW

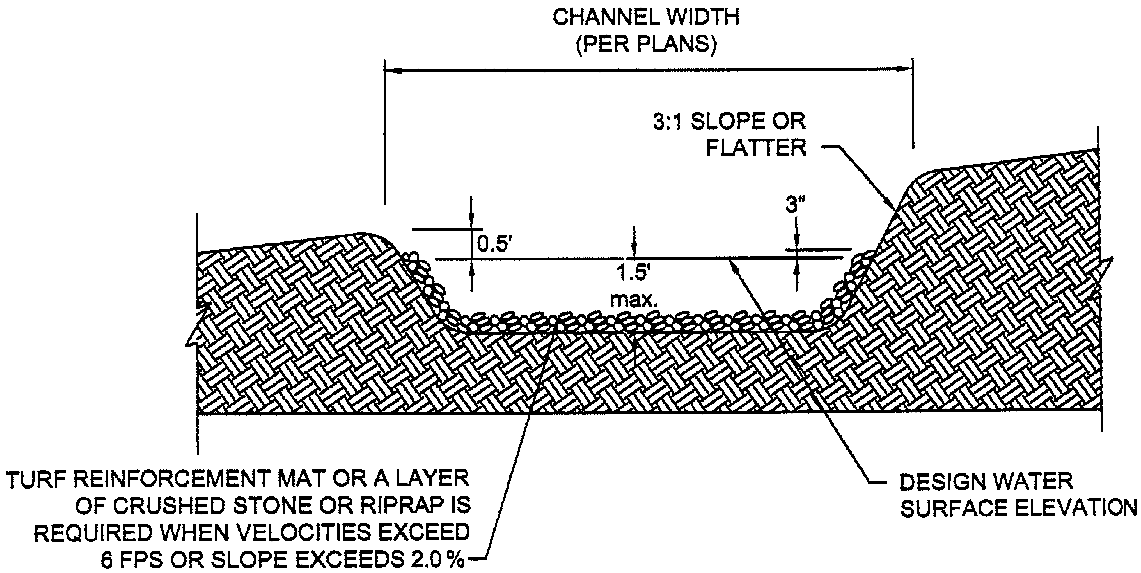


CROSS SECTION

| INTERCEPTOR SWALE | North Central Texas Council of Governments | STANDARD SPECIFICATION REFERENCE 201.6 | |
|---|---|---|---|
| | | DATE OCT. '04 | STANDARD DRAWING NO. 1030A |

City of Highland Village

NCTCOG STANDARD
DETAILS FOR
INTERCEPTOR SWALES

FIGURE C-3

INTERCEPTOR SWALE GENERAL NOTES:

1. ALL TREES, BRUSH, STUMPS, OBSTUCTIONS AND OTHER MATERIAL SHALL BE REMOVED AND DISPOSED OF SO AS NOT TO INTERFERE WITH THE PROPER FUNCTIONING OF THE SWALE.

2. THE SWALE SHALL BE EXCAVATED OR SHAPED TO LINE, GRADE AND CROSS-SECTION AS REQUIRED TO MEET CRITERIA SPECIFIED HEREIN AND BE FREE OF BANK PROJECTIONS OR OTHER IRREGULARITIES WHICH WILL IMPEDE NORMAL FLOW.

3. ALL EARTH REMOVED AND NOT NEEDED IN CONSTRUCTION SHALL BE DISPOSED OF IN AN APPROVED SPOILS SITE SO THAT IT WILL NOT INTERFERE WITH THE FUNCTIONING OF THE SWALE.

4. DIVERTED RUNOFF FROM A DISTURBED OR EXPOSED UPLAND AREA SHALL BE CONVEYED TO A SEDIMENT TRAPPING DEVICE.

5. THE ON-SITE LOCATION MAY NEED TO BE ADJUSTED TO MEET FIELD CONDITIONS IN ORDER TO UTILIZE THE MOST SUITABLE OUTLET.

6. FOR GRADES LESS THAN 2 PERCENT AND VELOCITIES LESS THAN 6 FEET PER SECOND, THE MINIMUM REQUIRED CHANNEL STABILIZATION SHALL BE GRASS, EROSION CONTROL MATS OR MULCHING. FOR GRADES IN EXCESS OF 2 PERCENT OR VELOCITIES EXCEEDING 6 FEET PER SECOND, STABILIZATION IS REQUIRED IN THE FORM OF TURF REINFORCEMENT MATS (OR A LAYER OF CRUSHED STONE OR RIP-RAP WITH APPROPRIATE SIZE, GRADATION, AND THICKNESS AS SPECIFIED IN THE SWPPP).

7. MINIMUM COMPACTION FOR THE SWALE SHALL BE 90 PERCENT STANDARD PROCTOR.

8. INSPECTION SHALL BE AS SPECIFIED IN THE SWPPP.

| INTERCEPTOR SWALE | North Central Texas Council of Governments | STANDARD SPECIFICATION REFERENCE 201.6 | |
|---|---|---|---|
| | | DATE OCT. '04 | STANDARD DRAWING NO. 1030B |

City of Highland Village

NCTCOG GENERAL NOTES FOR INTERCEPTOR SWALES

FIGURE C-4

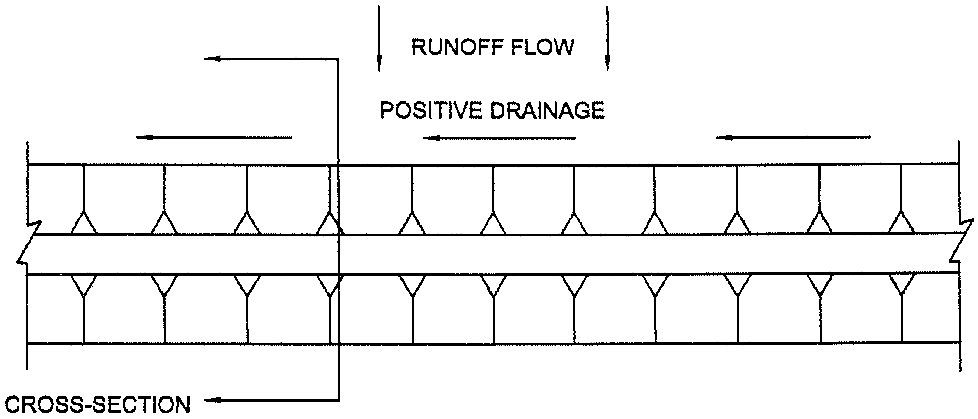


PLAN VIEW

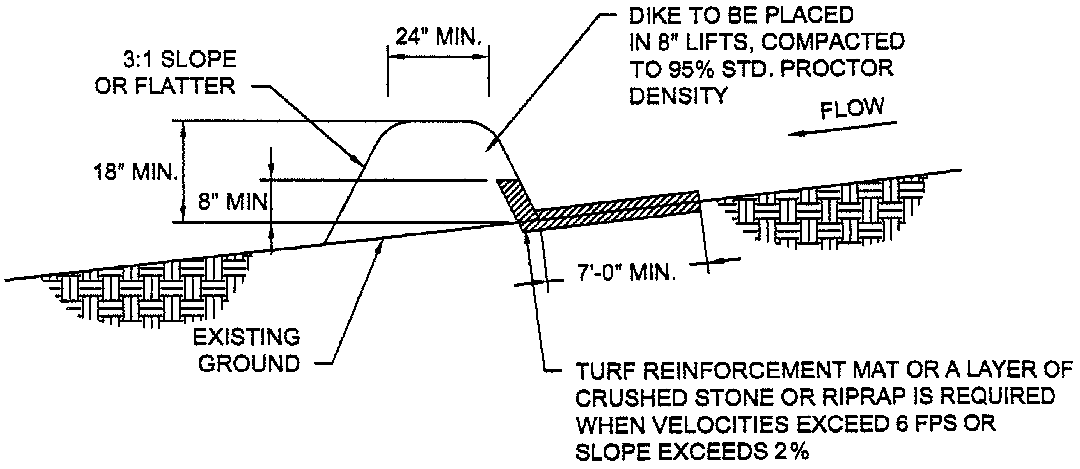


CROSS SECTION

| DIVERSION DIKE | North Central Texas Council of Governments | STANDARD SPECIFICATION REFERENCE 201.7 | |
|---|---|---|---|
| | | DATE OCT. '04 | STANDARD DRAWING NO. 1040A |

| | | |
|---|---|---|
| City of Highland Village | NCTCOG STANDARD DETAILS FOR DIVERSION DIKES | FIGURE C-5 |

DIVERSION DIKE GENERAL NOTES:

1. ALL DIKES SHALL BE PLACED IN 8" LIFTS OR LESS AND COMPACTED TO 95% STANDARD PROCTOR DENSITY.

2. ALL DIVERSION DIKES SHALL HAVE POSITIVE DRAINAGE TO A CONTROLLED OUTLET.

3. DIVERTED RUNOFF FROM A PROTECTED OR STABILIZED AREA SHALL HAVE ITS OUTLET FLOW DIRECTED TO AN UNDISTURBED STABILIZED AREA OR INTO A LEVEL SPREADER OR GRADE STABILIZATION STRUCTURE.

4. DIVERTED RUNOFF FROM A DISTURBED OR EXPOSED AREA SHALL BE CONVEYED TO A SEDIMENT TRAPPING DEVICE.

5. FOR GRADES LESS THAN 2 PERCENT AND VELOCITIES LESS THAN 6 FEET PER SECOND, THE MINIMUM REQUIRED CHANNEL STABILIZATION SHALL BE GRASS, EROSION CONTROL MATS OR MULCHING. FOR GRADES IN EXCESS OF 2 PERCENT OR VELOCITIES EXCEEDING 6 FEET PER SECOND, STABILIZATION IS REQUIRED IN THE FORM OF TURF REINFORCEMENT MATS (OR A LAYER OF CRUSHED STONE OR RIP-RAP WITH APPROPRIATE SIZE, GRADATION, AND THICKNESS AS SPECIFIED IN THE SWPPP).

6. INSPECTION SHALL BE AS SPECIFIED IN THE SWPPP.

| DIVERSION DIKE | North Central Texas Council of Governments | STANDARD SPECIFICATION REFERENCE 201.7 | |
|---|---|---|---|
| | | DATE OCT. '04 | STANDARD DRAWING NO. 1040B |

City of Highland Village

NCTCOG GENERAL NOTES FOR DIVERSION DIKES

FIGURE C-6

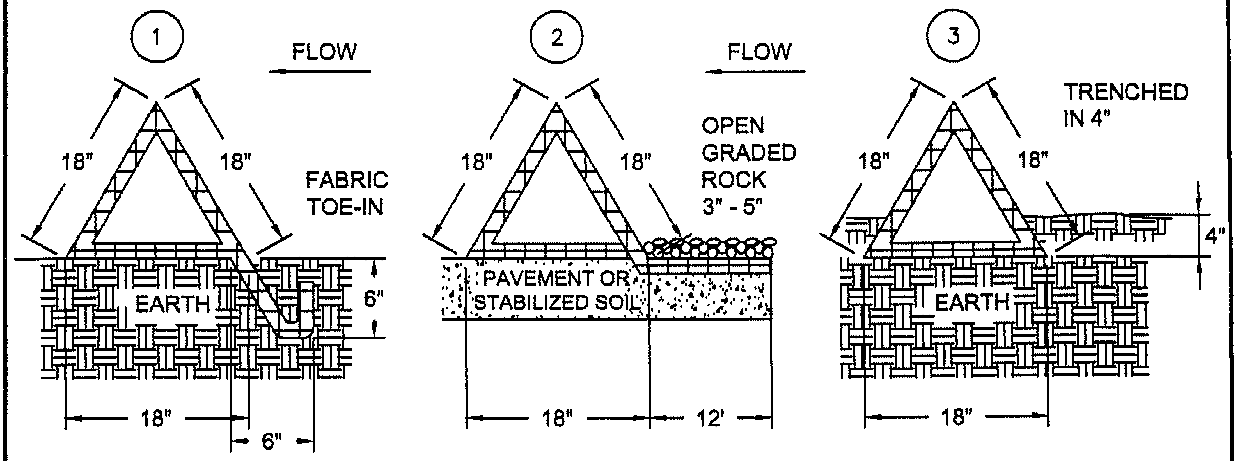


CROSS SECTION OF INSTALLATION OPTIONS

1. TOE-IN 6" MIN.
2. FABRIC SKIRT WEIGHTED WITH ROCK
3. TRENCHED IN 4"

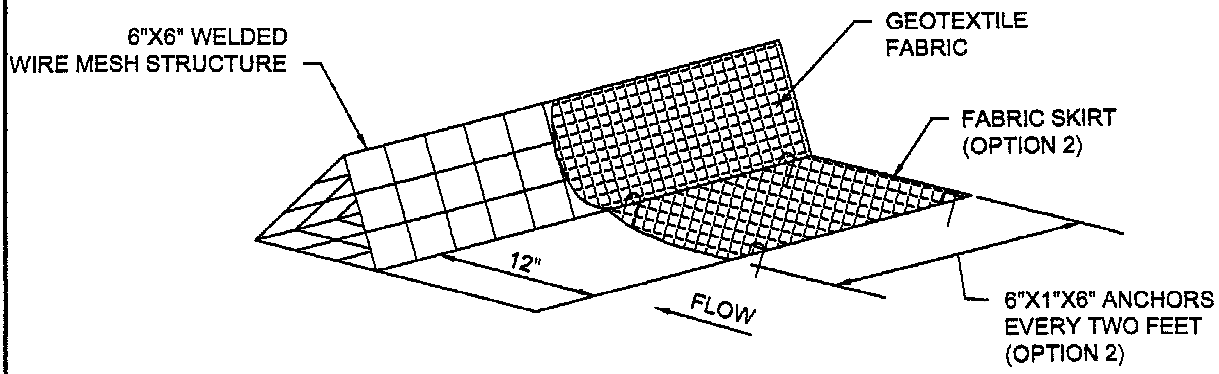


ISOMETRIC PLAN VIEW

| TRIANGULAR SEDIMENT FILTER DIKE | North Central Texas Council of Governments | STANDARD SPECIFICATION REFERENCE 201.8 | |
|---|---|---|---|
| | | DATE OCT. '04 | STANDARD DRAWING NO. 1050A |

| | | |
|---|---|---|
| City of Highland Village | NCTCOG STANDARD DETAILS FOR TRIANGULAR SEDIMENT FILTER DIKE | FIGURE C-7 |

TRIANGULAR SEDIMENT FILTER DIKE GENERAL NOTES:

1. DIKES SHALL BE PLACED IN A ROW WITH ENDS TIGHTLY ABUTTING THE ADJACENT DIKE.

2. THE FABRIC COVER AND SKIRT SHALL BE A CONTINUOUS EXTENSION OF THE FABRIC ON THE UPSTREAM FACE, AND FABRIC SHALL BE OVERLAPPED A MINIMUM OF 12".

3. THE SKIRT SHALL BE WEIGHTED WITH A CONTINUOUS LAYER OF TYPE 'A' RIP RAP, OR TOED-IN 6" WITH MECHANICALLY COMPACTED MATERIAL. OTHERWISE, THE ENTIRE STRUCTURE SHALL BE TRENCHED TO A DEPTH OF 4 INCHES.

4. DIKES AND SKIRT SHALL BE SECURELY ANCHORED IN PLACE USING 6-INCH WIRE STAPLES ON 2-FOOT CENTERS ON BOTH EDGES AND SKIRTS.

5. FILTER MATERIAL SHALL BE LAPPED OVER ENDS 6" TO COVER DIKE TO DIKE JOINTS. JOINTS SHALL BE FASTENED WITH GALVANIZED SHOAT RINGS.

6. THE DIKE STRUCTURE SHALL BE 6 GA. 6" X 6" WIRE MESH, 18" ON A SIDE.

7. INSPECTION SHALL BE AS SPECIFIED IN THE SWPPP. REPAIR OR REPLACEMENT SHALL BE MADE PROMPTLY AS NEEDED BY THE CONTRACTOR.

8. THE FILTER DIKE SHALL BE REMOVED WHEN FINAL STABILIZATION IS ACHIEVED OR ANOTHER EROSION OR SEDIMENT CONTROL DEVICE IS EMPLOYED.

9. ACCUMULATED SILT SHALL BE REMOVED WHEN IT REACHES APPROXIMATELY 6-INCHES IN DEPTH. THE SILT SHALL BE DISPOSED OF AT AN APPROVED SITE AND IN SUCH A MANNER AS TO NOT CONTRIBUTE TO ADDITIONAL SILTATION.

| | | | |
|---|---|---|---|
| TRIANGULAR SEDIMENT FILTER DIKE | North Central Texas Council of Governments | STANDARD SPECIFICATION REFERENCE 201.8 | |
| | | DATE OCT. '04 | STANDARD DRAWING NO. 1050B |

| | | |
|---|---|---|
| City of Highland Village | NCTCOG GENERAL NOTES FOR TRIANGULAR SEDIMENT FILTER DIKE | FIGURE C-8 |

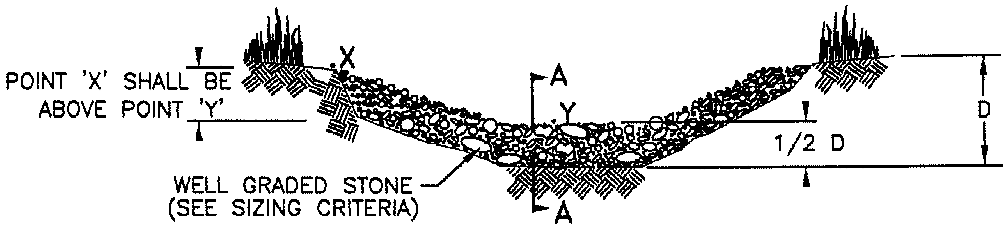


VIEW LOOKING UPSTREAM

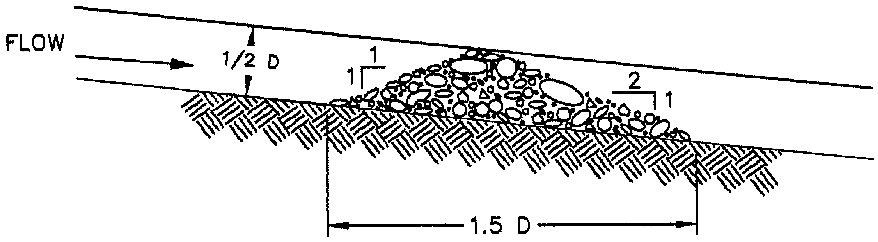


SECTION A – A

'L' = THE DISTANCE SUCH THAT POINTS 'A' AND 'B' ARE OF EQUAL ELEVATION.

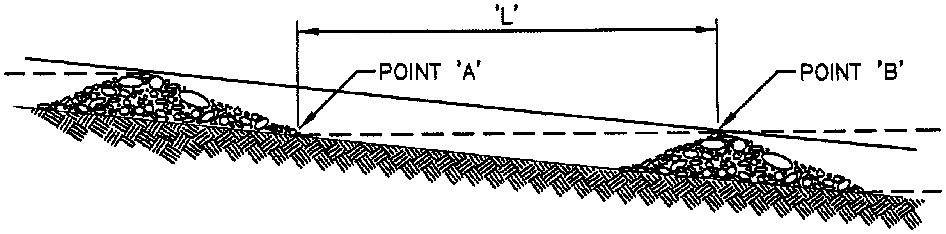


SPACING BETWEEN CHECK DAMS

| ROCK CHECK DAM | North Central Texas Council of Governments | STANDARD SPECIFICATION REFERENCE 201.9 | |
|---|---|---|---|
| | | DATE OCT. '04 | STANDARD DRAWING NO. 1060A |

| | | |
|---|---|---|
| City of Highland Village | NCTCOG STANDARD DETAILS FOR ROCK CHECK DAMS | FIGURE C-9 |

ROCK CHECK DAM GENERAL NOTES:

1. STONE SHALL BE WELL GRADED WITH SIZE RANGE FROM 1½ TO 3½ INCHES IN DIAMETER DEPENDING ON EXPECTED FLOWS.

2. THE CHECK DAM SHALL BE INSPECTED AS SPECIFIED IN THE SWPPP AND SHALL BE REPLACED WHEN THE STRUCTURE CEASES TO FUNCTION AS INTENDED DUE TO SILT ACCUMULATION AMONG THE ROCKS, WASHOUT, CONSTRUCTION TRAFFIC DAMAGE, ETC.

3. WHEN SILT REACHES A DEPTH EQUAL TO ONE-THIRD OF THE HEIGHT OF THE CHECK DAM OR ONE FOOT, WHICHEVER IS LESS, THE SILT SHALL BE REMOVED AND DISPOSED OF PROPERLY.

4. WHEN THE SITE HAS ACHIEVED FINAL STABILIZATION OR ANOTHER EROSION OR SEDIMENT CONTROL DEVICE IS EMPLOYED, THE CHECK DAM AND ACCUMULATED SILT SHALL BE REMOVED AND DISPOSED OF IN AN APPROVED MANNER.

| ROCK CHECK DAM | North Central Texas Council of Governments | STANDARD SPECIFICATION REFERENCE 201.9 | |
|---|---|---|---|
| | | DATE OCT. '04 | STANDARD DRAWING NO. 1060B |

City of Highland Village

NCTCOG GENERAL NOTES FOR ROCK CHECK DAMS

FIGURE C-10

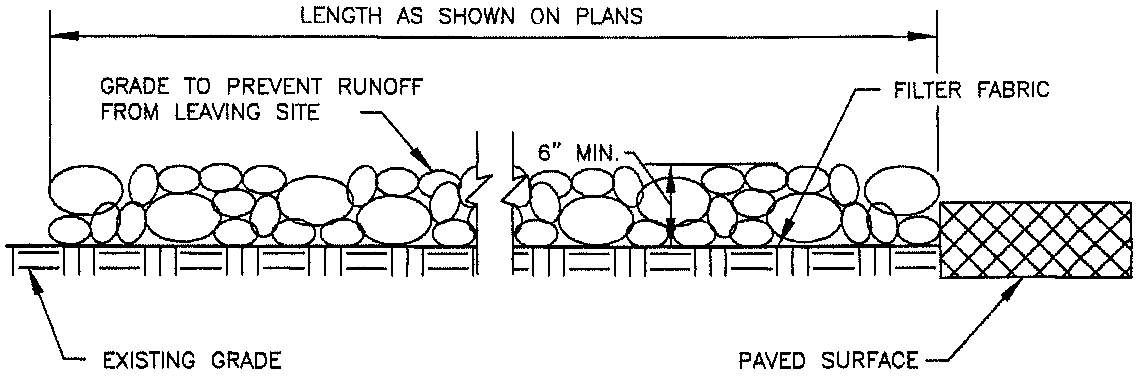


PROFILE VIEW

N.T.S.

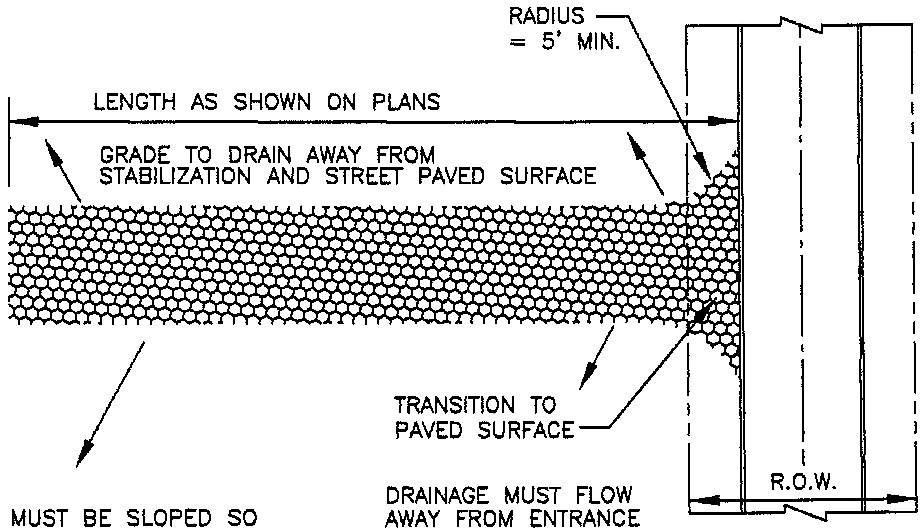


ENTRANCE MUST BE SLOPED SO THAT STORM WATER IS NOT ALLOWED TO LEAVE THE SITE AND ENTER ROADWAYS.

PLAN VIEW

N.T.S.

| STABILIZED CONSTRUCTION ENTRANCE | North Central Texas Council of Governments | STANDARD SPECIFICATION REFERENCE 201.10 | |
|---|---|---|---|
| | | DATE OCT. '04 | STANDARD DRAWING NO. 1070A |

City of Highland Village

NCTCOG STANDARD DETAIL FOR STABILIZED CONSTRUCTION ENTRANCE

FIGURE C-11

STABILIZED CONSTRUCTION ENTRANCE GENERAL NOTES:

1. STONE SHALL BE 3 TO 5 INCH DIAMETER COARSE AGGREGATE.

2. LENGTH SHALL BE AS SPECIFIED IN THE SWPPP.

3. THE THICKNESS SHALL NOT BE LESS THAN 12 INCHES.

4. THE WIDTH SHALL BE NO LESS THAN THE FULL WIDTH OF ALL POINTS OF INGRESS OR EGRESS.

5. WHEN NECESSARY, VEHICLES SHALL BE CLEANED TO REMOVE SEDIMENT PRIOR TO ENTRANCE ONTO A PUBLIC ROADWAY. WHEN WASHING IS REQUIRED, IT SHALL BE DONE ON AN AREA STABILIZED WITH CRUSHED STONE WITH DRAINAGE FLOWING AWAY FROM BOTH THE STREET AND THE STABILIZED ENTRANCE. ALL SEDIMENT SHALL BE PREVENTED FROM ENTERING ANY STORM DRAIN, DITCH OR WATERCOURSE USING APPROVED METHODS.

6. THE ENTRANCE SHALL BE MAINTAINED IN A CONDITION WHICH WILL PREVENT TRACKING OR FLOWING OF SEDIMENT ONTO PAVED SURFACES. THIS MAY REQUIRE PERIODIC TOP DRESSING WITH ADDITIONAL STONE AS CONDITIONS DEMAND. ALL SEDIMENT SPILLED, DROPPED, WASHED, OR TRACKED ONTO PAVED SURFACES MUST BE REMOVED IMMEDIATELY.

7. THE ENTRANCE MUST BE PROPERLY GRADED OR INCORPORATE A DRAINAGE SWALE TO PREVENT RUNOFF FROM LEAVING THE CONSTRUCTION SITE.

8. PREVENT SHORTCUTTING OF THE FULL LENGTH OF THE CONSTRUCTION ENTRANCE BY INSTALLING BARRIERS AS NECESSARY.

9. INSPECTION SHALL BE AS SPECIFIED IN THE SWPPP.

| | | | |
|---|---|---|---|
| STABILIZED CONSTRUCTION ENTRANCE | North Central Texas Council of Governments | STANDARD SPECIFICATION REFERENCE 201.11 | |
| | | DATE OCT. '04 | STANDARD DRAWING NO. 1070B |

City of Highland Village

NCTCOG GENERAL NOTES FOR STABLIZED CONSTRUCTION ENTRANCE

FIGURE C-12

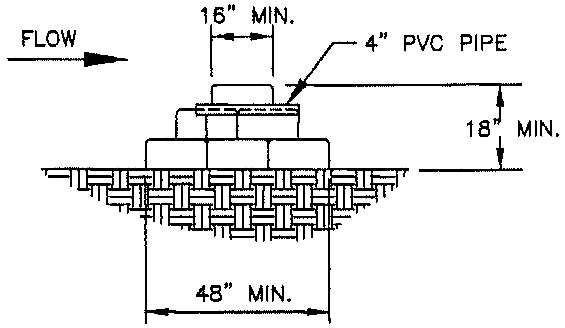


CROSS SECTION

N.T.S.

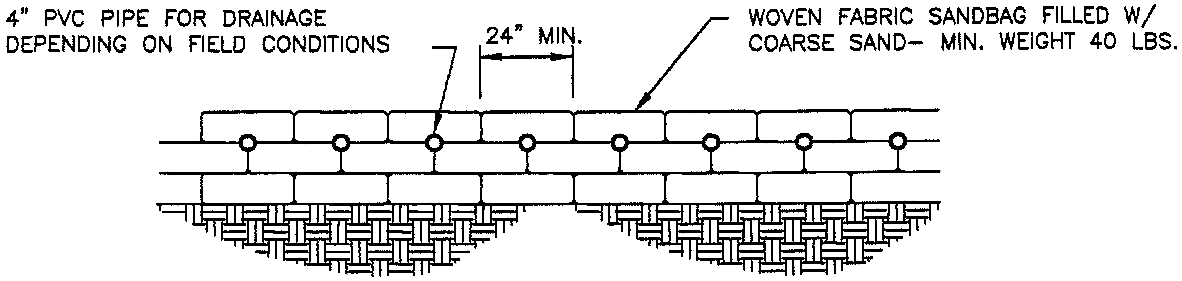


PROFILE VIEW

N.T.S.

NOTE: SAND BAG CHECK DAM CONSTRUCTION AND PLACEMENT SHALL BE IN ACCORDANCE WITH THE SPACING, CROSS–SECTION, AND PROFILE VIEWS OF THE ROCK CHECK DAM IN DRAWING 1060A.

| SAND BAG CHECK DAM | North Central Texas Council of Governments | STANDARD SPECIFICATION REFERENCE 201.10 | |
|---|---|---|---|
| | | DATE OCT. '04 | STANDARD DRAWING NO. 1080A |

City of Highland Village

NCTCOG STANDARD
DETAILS FOR
SAND BAG CHECK DAM

FIGURE C-13

SAND BAG CHECK DAM GENERAL NOTES:

1. WHEN A SANDBAG IS FILLED WITH MATERIAL, THE OPEN END OF THE SANDBAG SHOULD BE STAPLED OR TIED WITH NYLON OR POLY CORD.

2. SANDBAGS SHOULD BE STACKED IN AT LEAST THREE ROWS ABUTTING EACH OTHER, AND IN STAGGERED ARRANGEMENT.

3. THE BASE OF THE CHECK DAM SHOULD HAVE AT LEAST 3 SANDBAGS. THESE CAN BE REDUCED TO 2 AND 1 BAG IN THE SECOND AND THIRD ROWS RESPECTIVELY.

4. FOR EACH ADDITIONAL 6" OF HEIGHT, AN ADDITIONAL SANDBAG MUST BE ADDED TO EACH ROW WIDTH.

5. THE SANDBAG CHECK DAM SHALL BE INSPECTED AS SPECIFIED IN THE SWPPP AND SHALL BE RESHAPED OR REPLACED AS NEEDED. REPAIRS SHALL BE MADE FOR WASHOUT, CONSTRUCTION TRAFFIC DAMAGE, ETC.

6. WHEN SILT REACHES A DEPTH EQUAL TO ONE-THIRD OF THE HEIGHT OF THE CHECK DAM OR ONE FOOT, WHICHEVER IS LESS, THE SILT SHALL BE REMOVED AND DISPOSED OF AT AN APPROVED SITE AND IN SUCH A MANNER AS TO NOT CREATE A SILTATION PROBLEM.

7. WHEN THE SITE HAS ACHIEVED FINAL STABILIZATION OR ANOTHER EROSION OR SEDIMENT CONTROL DEVICE IS EMPLOYED, THE CHECK DAM AND ACCUMULATED SILT SHALL BE REMOVED AND DISPOSED OF IN AN APPROVED MANNER.

| SAND BAG CHECK DAM | North Central Texas Council of Governments | STANDARD SPECIFICATION REFERENCE 201.10 | |
|---|---|---|---|
| | | DATE OCT. '04 | STANDARD DRAWING NO. 1080B |

City of Highland Village

NCTCOG GENERAL NOTES FOR SAND BAG CHECK DAM

FIGURE C-14

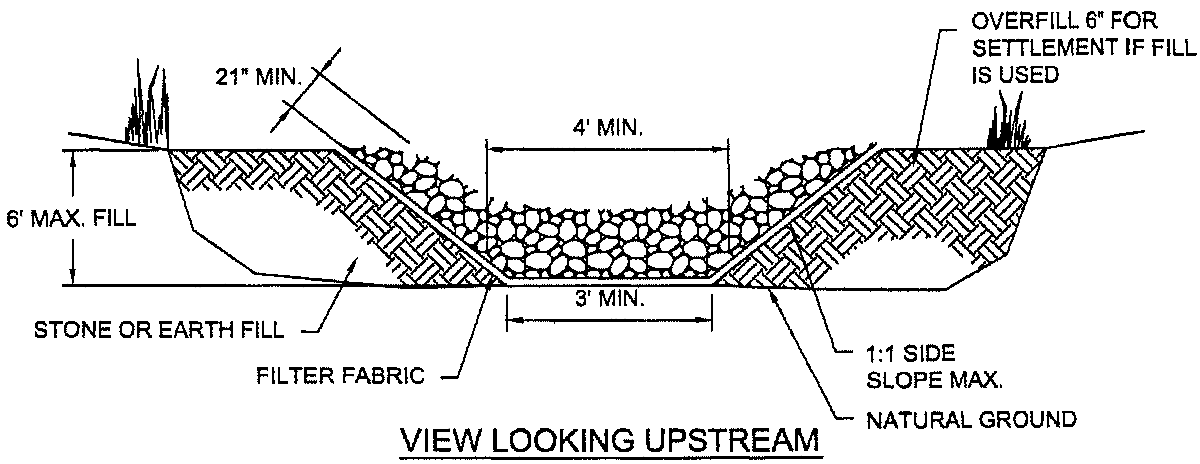


VIEW LOOKING UPSTREAM

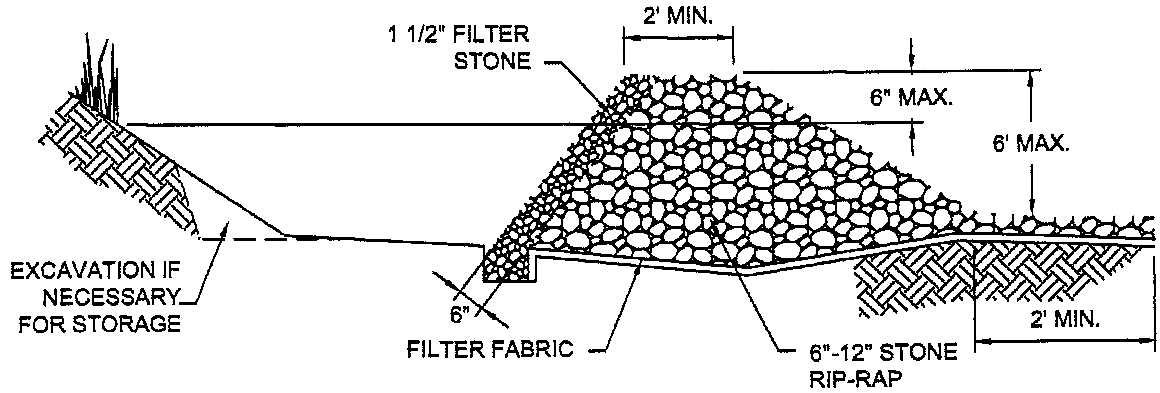


SECTION

| STONE OUTLET SEDIMENT TRAP | North Central Texas Council of Governments | STANDARD SPECIFICATION REFERENCE 201.12 | |
|---|---|---|---|
| | | DATE OCT. '04 | STANDARD DRAWING NO. 1090 |

| | | |
|---|---|---|
| City of Highland Village | NCTCOG STANDARD DETAIL FOR STONE OUTLET SEDIMENT TRAP | FIGURE C-15 |

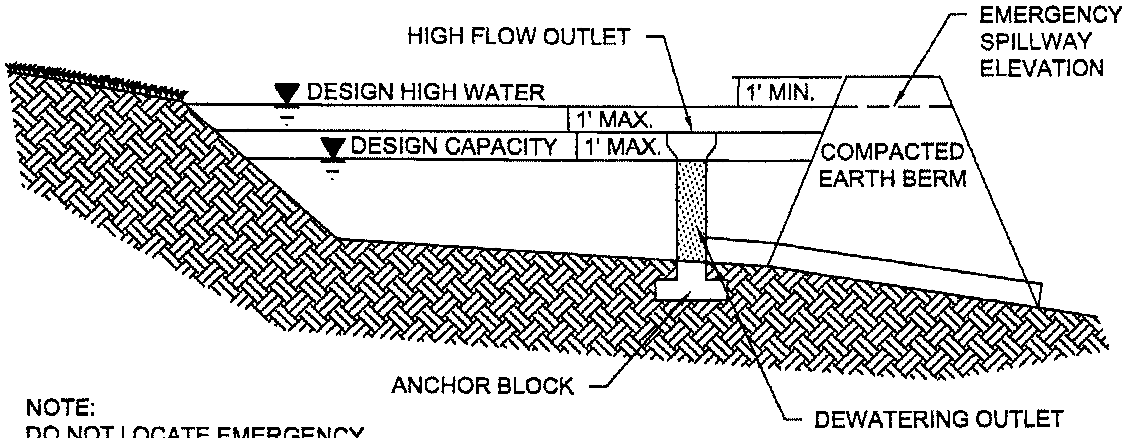


NOTE:
DO NOT LOCATE EMERGENCY SPILLWAY ON EARTH BERM

CROSS SECTION

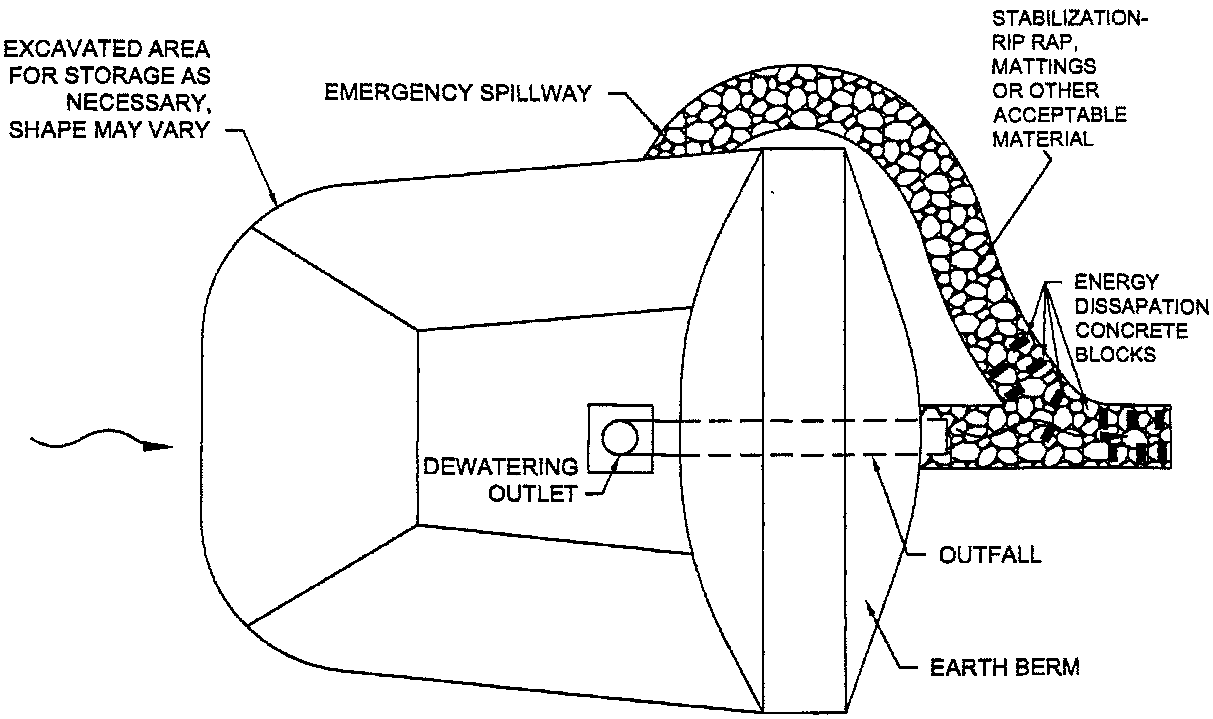


PLAN VIEW

| PIPE OUTLET | North Central Texas Council of Governments | STANDARD SPECIFICATION REFERENCE | |
|---|---|---|---|
| SEDIMENT BASIN | | DATE OCT. '04 | STANDARD DRAWING NO. 1100 |

City of Highland Village

NCTCOG STANDARD
DETAIL FOR PIPE
OUTLET SEDIMENT BASIN

FIGURE C-16

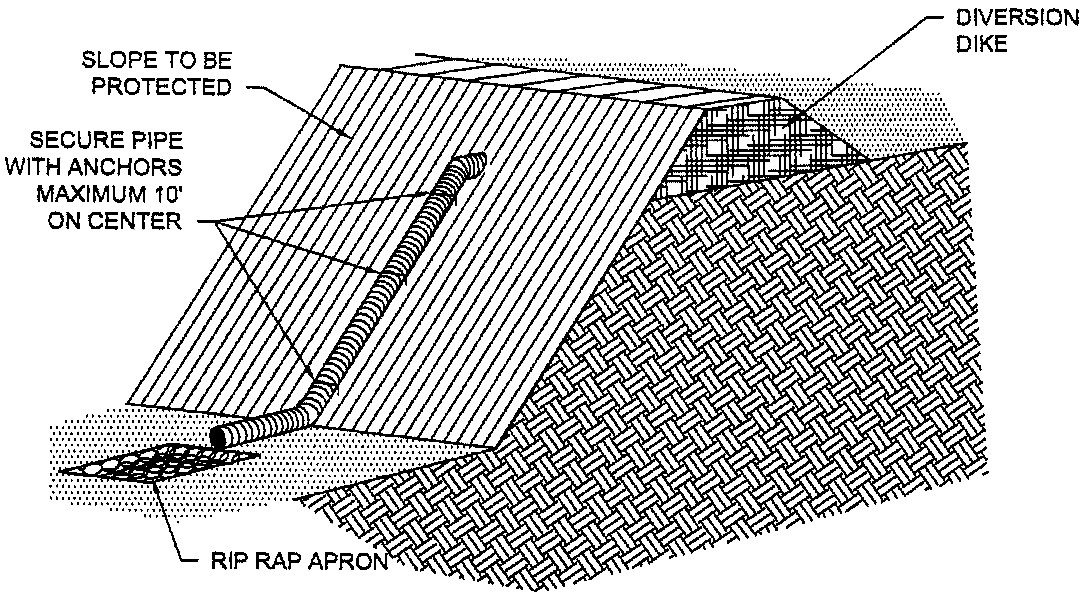


ISOMETRIC PLAN VIEW

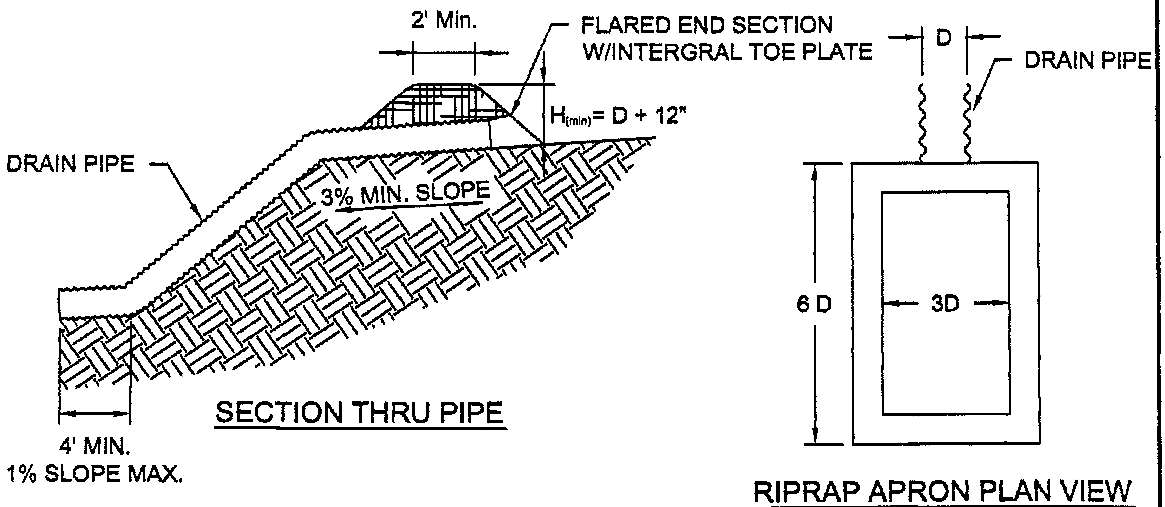


SECTION THRU PIPE

RIPRAP APRON PLAN VIEW

RIPRAP SHALL CONSIST OF 50 TO 150 POUND STONES PLACED IN A LAYER OF NOT LESS THAN 12 INCHES. THE DEPTH OF THE APRON SHALL EQUAL THE PIPE DIAMETER BUT IN NO CASE SHALL IT BE LESS THAN 12 INCHES.

| PIPE SLOPE DRAIN | North Central Texas Council of Governments | STANDARD SPECIFICATION REFERENCE 201.13 | |
|---|---|---|---|
| | | DATE OCT. '04 | STANDARD DRAWING NO. 1110 |

City of Highland Village

NCTCOG STANDARD
DETAIL FOR PIPE
SLOPE DRAIN

FIGURE C-17

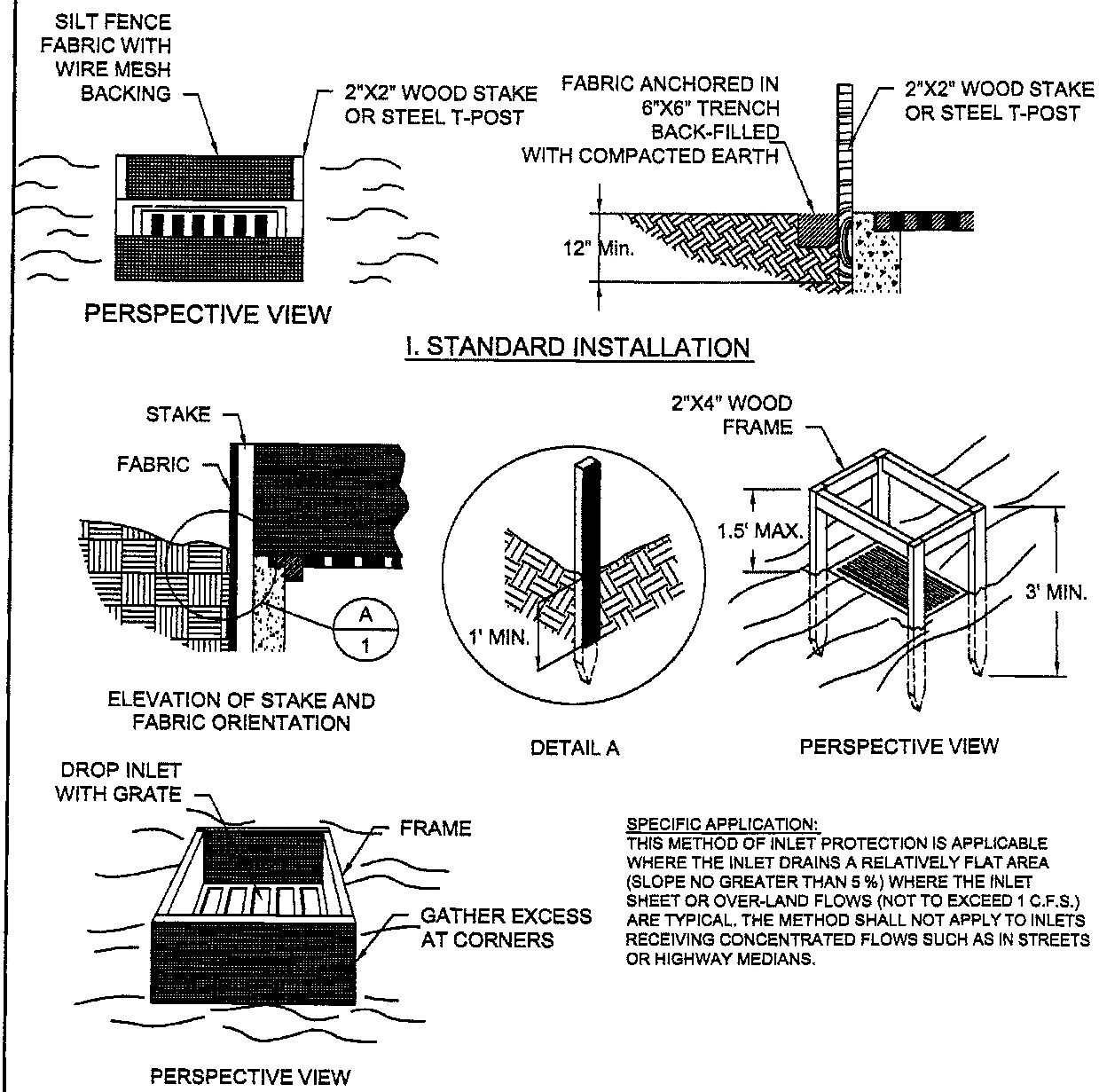


SPECIFIC APPLICATION:
THIS METHOD OF INLET PROTECTION IS APPLICABLE WHERE THE INLET DRAINS A RELATIVELY FLAT AREA (SLOPE NO GREATER THAN 5 %) WHERE THE INLET SHEET OR OVER-LAND FLOWS (NOT TO EXCEED 1 C.F.S.) ARE TYPICAL. THE METHOD SHALL NOT APPLY TO INLETS RECEIVING CONCENTRATED FLOWS SUCH AS IN STREETS OR HIGHWAY MEDIANS.

| INLET PROTECTION FILTER BARRIER | North Central Texas Council of Governments | STANDARD SPECIFICATION REFERENCE 201.14 | |
|---|---|---|---|
| | | DATE OCT. '04 | STANDARD DRAWING NO. 1120 |

City of Highland Village

NCTCOG STANDARD
DETAIL FOR INLET
PROTECTION FILTER BARRIER

FIGURE C-18

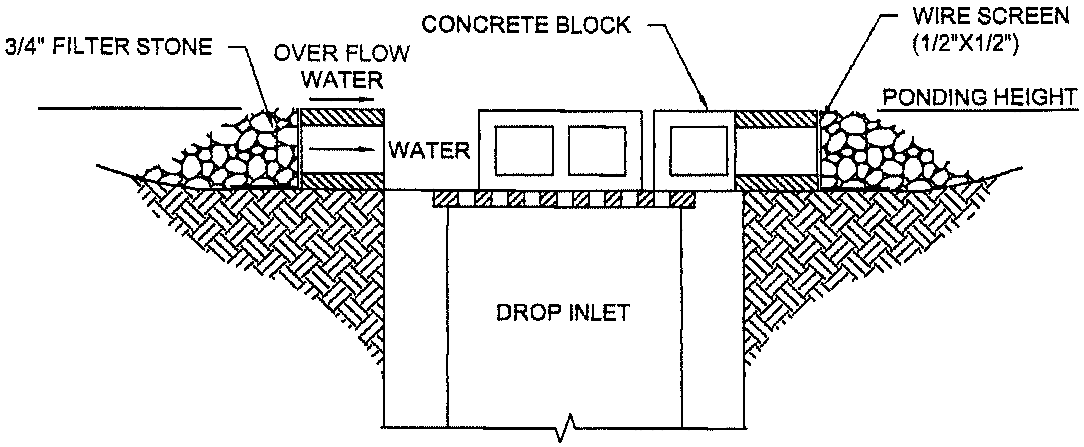


CROSS SECTION

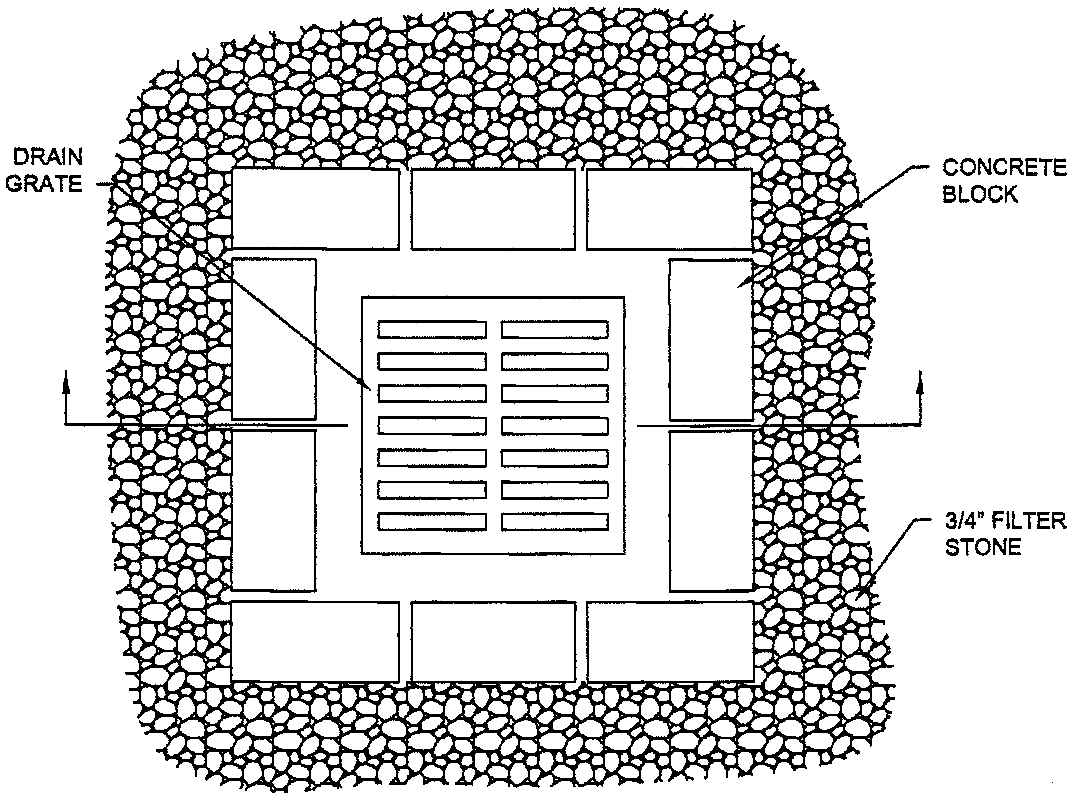


PLAN VIEW

| INLET PROTECTION—DROP BLOCK AND GRAVEL | North Central Texas Council of Governments | STANDARD SPECIFICATION REFERENCE 201.14 | |
|---|---|---|---|
| | | DATE OCT. '04 | STANDARD DRAWING NO. 1130 |

| | | |
|---|---|---|
| City of Highland Village | NCTCOG STANDARD<br>DETAILS FOR INLET PROTECTION<br>DROP BLOCK AND GRAVEL | FIGURE C-19 |

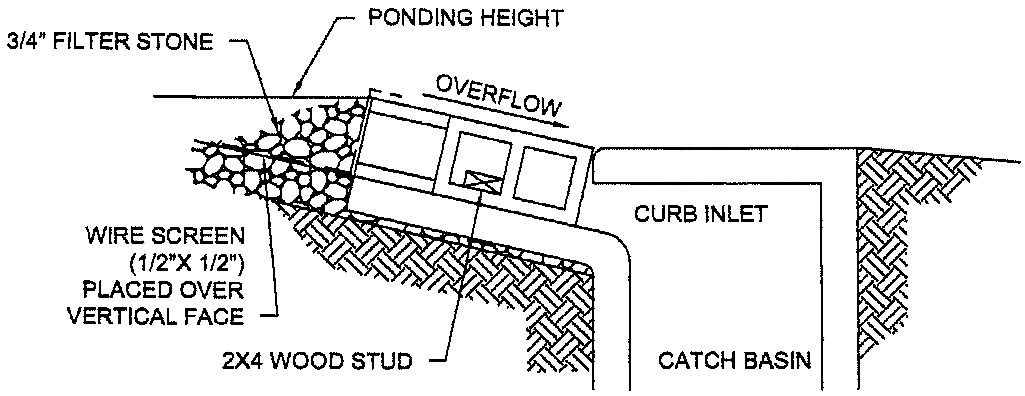


CROSS SECTION

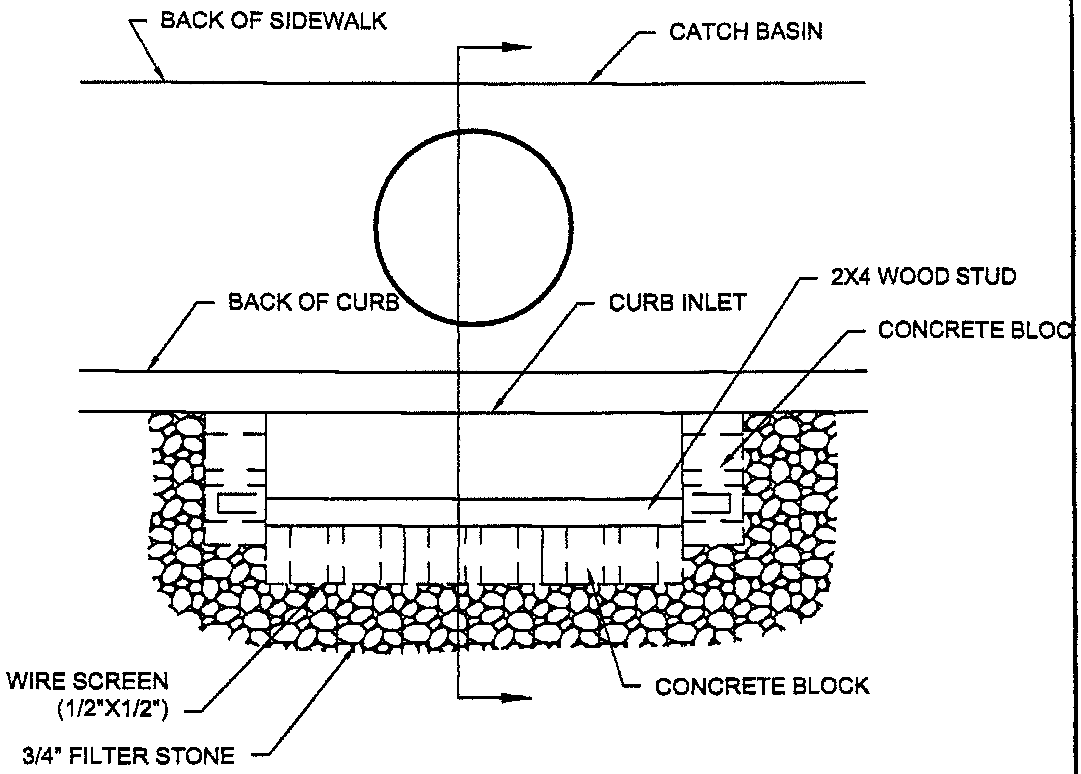


PLAN VIEW

| INLET PROTECTION—CURB BLOCK AND GRAVEL | North Central Texas Council of Governments | STANDARD SPECIFICATION REFERENCE 201.14 | |
|---|---|---|---|
| | | DATE OCT. '04 | STANDARD DRAWING NO. 1140 |

| | | |
|---|---|---|
| City of Highland Village | NCTCOG STANDARD<br>DETAIL FOR INLET PROTECTION<br>CURB BLOCK AND GRAVEL | FIGURE C-20 |

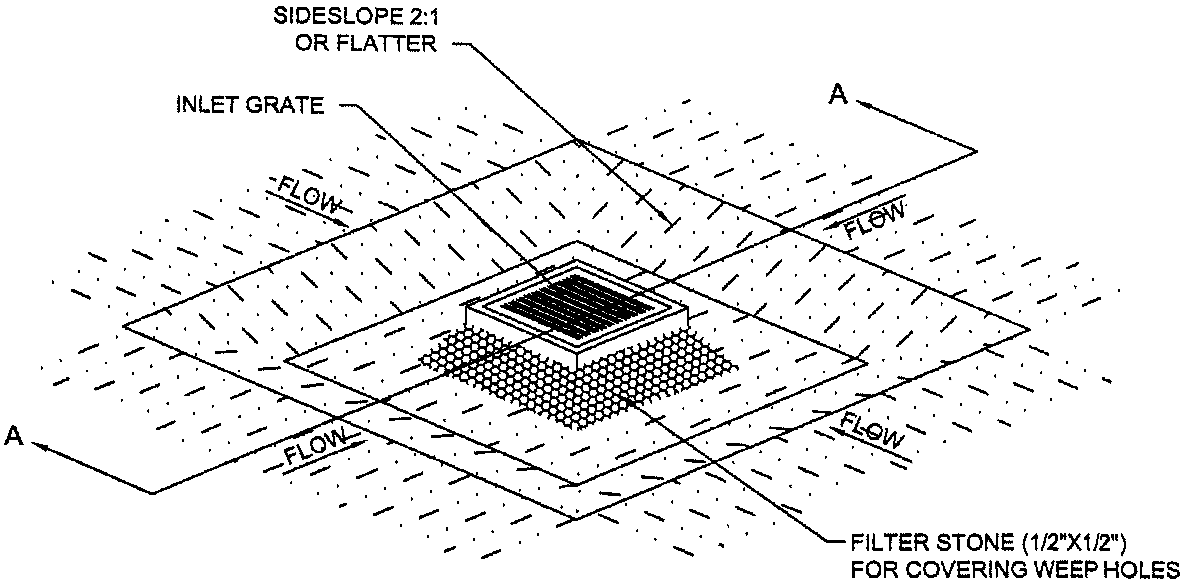


ISOMETRIC PLAN VIEW

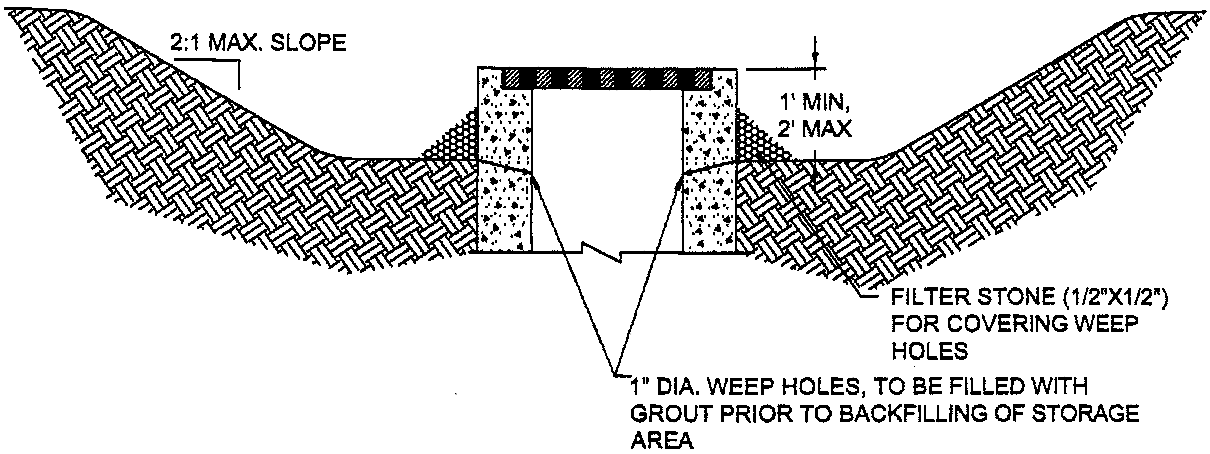


SECTION A-A

| | | | |
|---|---|---|---|
| INLET PROTECTION | North Central Texas Council of Governments | STANDARD SPECIFICATION REFERENCE 201.14 | |
| EXCAVATED IMPOUNDMENT | | DATE OCT. '04 | STANDARD DRAWING NO. 1150 |

| | | |
|---|---|---|
| City of Highland Village | NCTCOG STANDARD<br>DETAIL FOR INLET PROTECTION<br>EXCAVATED IMPOUNDMENT | FIGURE C-21 |

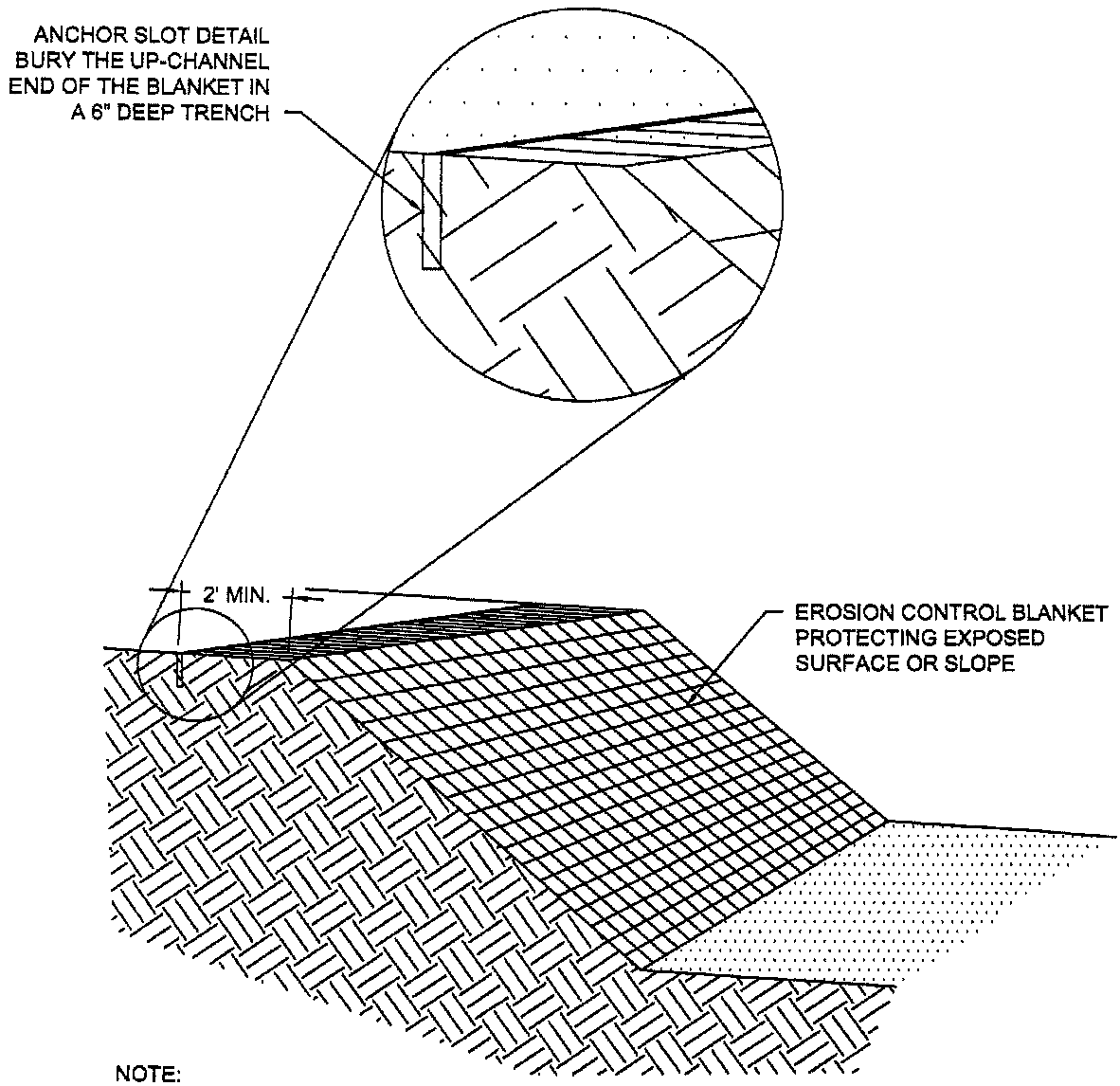


NOTE:
ANCHORING OF THE EROSION CONTROL BLANKETS SHALL BE DONE IN ACCORDANCE WITH THE MANUFACTURER'S RECOMMENDATIONS.

| EROSION CONTROL BLANKETS | North Central Texas Council of Governments | STANDARD SPECIFICATION REFERENCE 201.15 | |
|---|---|---|---|
| | | DATE OCT. '04 | STANDARD DRAWING NO. 1160A |

City of Highland Village

NCTCOG STANDARD
DETAIL FOR EROSION
CONTROL BLANKETS

FIGURE C-22

EROSION CONTROL BLANKETS GENERAL NOTES:

1. PRIOR TO THE INSTALLATION OF ANY EROSION CONTROL BLANKETS, ALL ROCKS, DIRT CLODS, STUMPS, ROOTS, TRASH AND ANY OTHER OBSTRUCTIONS THAT WOULD PREVENT THE BLANKET FROM LYING IN DIRECT CONTACT WITH THE SOIL SHALL BE REMOVED. ANCHOR TRENCHING SHALL BE LOCATED ALONG THE ENTIRE PERIMETER OF THE INSTALLATION AREA, EXCEPT FOR SMALL AREAS WITH LESS THAN 2% SLOPE.

2. INSTALLATION AND ANCHORING SHALL CONFORM TO THE RECOMMENDATIONS SHOWN WITHIN THE MANUFACTURER'S PUBLISHED LITERATURE FOR THE APPROVED EROSION CONTROL BLANKET. PARTICULAR ATTENTION MUST BE PAID TO JOINTS AND OVERLAPPING MATERIAL.

3. AFTER APPROPRIATE INSTALLATION, THE BLANKETS SHOULD BE CHECKED FOR UNIFORM CONTACT WITH THE SOIL, SECURITY OF THE LAP JOINTS, AND FLUSHNESS OF THE STAPLES WITH THE GROUND.

4. INSPECTION SHALL BE AS SPECIFIED IN THE SWPPP.

| | | | |
|---|---|---|---|
| EROSION CONTROL BLANKETS | North Central Texas Council of Governments | STANDARD SPECIFICATION REFERENCE 201.15 | |
| | | DATE OCT. '04 | STANDARD DRAWING NO. 1160B |

City of Highland Village

NCTCOG GENERAL NOTES FOR EROSION CONTROL BLANKETS

FIGURE C-23